RELEASED FOR	CLIENT :	CONSULTANT:				
☐ Draft Detailed Project Report ▩ Detailed Project Report ☐ TENDER	Bengaluru Smart Infrastructure Limited Office of the Project Engineer-1, B-Smile, Room No.108, 1st Floor, Annexe-2 Building, N.R.Square, BBMP Bengaluru-560002	Infra Support Your Complete Engineering Partner INFRA SUPPORT ENGINEERING CONSULTANTS PVT. LTD An ISO 9001-2015 Certified Company Infra House, #456/11/1, Hennur Bande, Hennur Bagalur Main Road, Kalyan Nagar, Bangalore - 560 043. Phone: +91 91 48192837 Email: info@infrasupport.in www.infrasupport.in	DRAWN: SK DESIGNED: NNK CHECKED: TRL DATE: Dec - 2025 SHEET: 01 of 01	PROJECT: Detailed Project Report (DPR) for Construction of Elevated Corridors of Package 1 NAME OF WORK: Construction of 4-Lane Flyover on Bellary Road from UAS Staff Quarters to Mekhri Circle, Bengaluru TITLE : KEYMAP SCALE: As shown	DRG. NO. : IS\2501\HIG\KP-001.	JOB NO. 2501 REVISION R0

Airport

Mekhri Circle

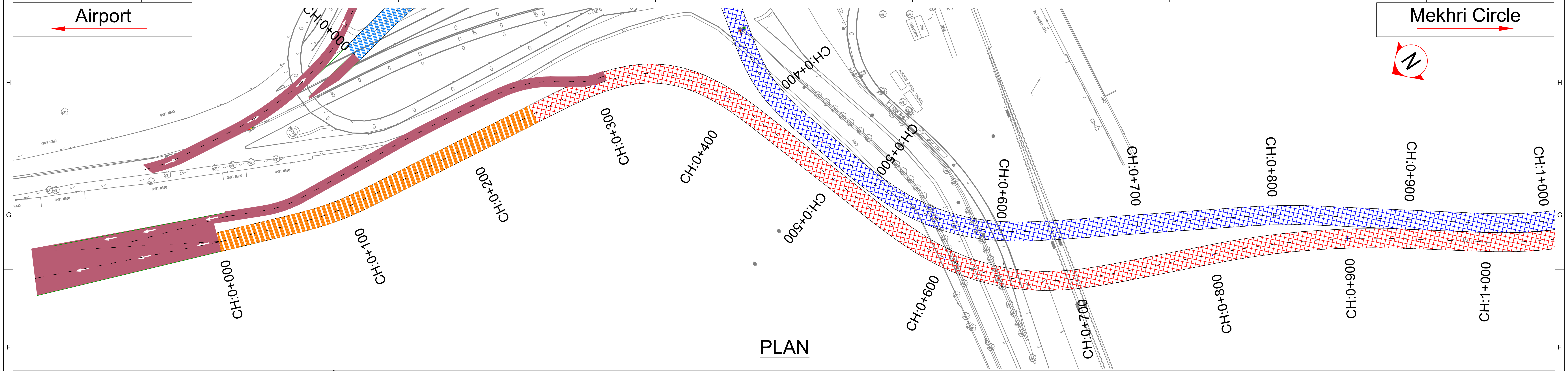

PLAN

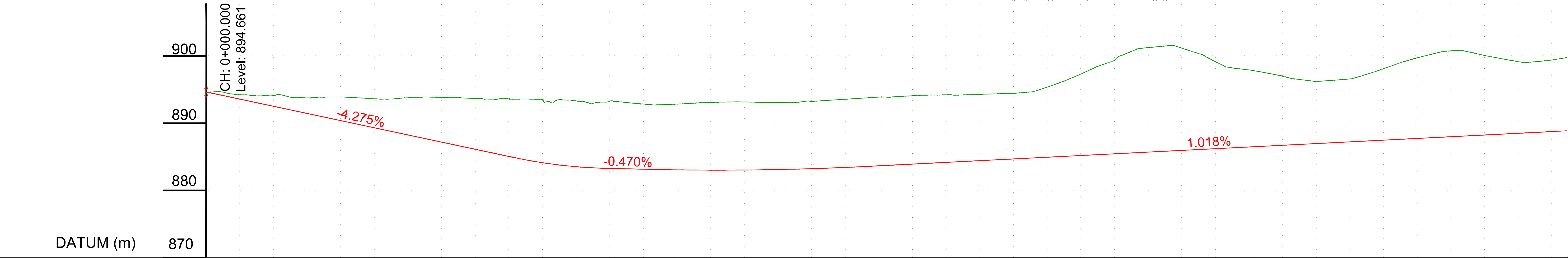

Chainage	Proposed Levels (m)	Existing Levels (m)	Level Difference (m)
0+000	894.661	894.579	0.082
0+025	893.592	894.239	-0.647
0+050	892.523	894.116	-1.593
0+075	891.455	893.768	-2.313
0+100	890.386	893.903	-3.517
0+125	889.317	893.630	-4.313
0+150	888.249	893.777	-5.529
0+175	887.180	893.829	-6.649
0+200	886.111	893.667	-7.556
0+225	885.042	893.722	-8.680
0+250	884.109	893.537	-9.428
0+275	883.514	893.311	-9.798
0+300	883.256	893.264	-10.008
0+325	883.139	892.844	-9.706
0+350	883.042	892.834	-9.792
0+375	883.001	893.087	-10.085
0+400	883.018	893.153	-10.135
0+425	883.092	893.086	-9.994
0+450	883.223	893.234	-10.012
0+475	883.411	893.559	-10.148
0+500	883.653	893.883	-10.231
0+525	883.907	894.080	-10.173
0+550	884.161	894.219	-10.058
0+575	884.416	894.289	-9.873
0+600	884.670	894.441	-9.771
0+625	884.925	895.360	-10.435
0+650	885.179	897.311	-12.132
0+675	885.434	899.367	-13.934
0+700	885.688	901.249	-15.561
0+725	885.943	901.176	-15.234
0+750	886.197	899.165	-12.968
0+775	886.452	897.923	-11.471
0+800	886.706	896.979	-10.273
0+825	886.960	896.198	-9.238
0+850	887.215	896.588	-9.373
0+875	887.469	898.116	-10.647
0+900	887.724	899.737	-12.014
0+925	887.978	900.765	-12.787
0+950	888.233	900.081	-11.848
0+975	888.487	899.162	-10.675
1+000	888.742	899.404	-10.662

Proposed Horizontal Alignment Schematic: L=46.232; Ls=35; L=11.13 R=200.0 Δ-3.190; Ls=35; L=135.153; Ls=75; L=26.90 R=90.0 Δ-17.124; Ls=75; L=88.383; Ls=70; L=76.22 R=170.0 Δ-25.688; Ls=70; L=48.375; Ls=20; L=120.33 R=600.0 Δ-11.490; Ls=20; L=31.440; Ls=4

Proposed Vertical Alignment Schematic: L=227.68m -4.27%; L= 70.0m R= 1840m K= 18; L=31.13m -0.47%; L= 162.8m R= 10943m K= 109; L= 508.15m 1.02%

Superelevation: e:2.00% e:-2.00%; e:5.00% e:-5.00%; e:2.00% e:-2.00%; e:5.00% e:-5.00%; e:2.00% e:-2.00%; e:5.00% e:-5.00%; e:-2.00% e:-2.00%; e:3.13% e:-3.13%; e:2.00% e:-2.00%

PROFILE

SI NO.	DESCRIPTION	REVISION.	BY	DATE

RELEASED FOR
- ☐ Draft Detailed Project Report
- ☒ Detailed Project Report
- ☐ TENDER

CLIENT :
Bengaluru Smart Infrastructure Limited
Office of the Project Engineer-1, B-Smile,
Room No.108, 1st Floor, Annexe-2 Building,
N.R.Square, BBMP Bengaluru-560002

CONSULTANT:
Infra Support — Your Complete Engineering Partner
INFRA SUPPORT ENGINEERING CONSULTANTS PVT. LTD
An ISO 9001-2015 Certified Company
Infra House, #456/11/1, Hennur Bande,
Hennur Bagalur Main Road, Kalyan Nagar,
Bangalore - 560 043.
Phone: +91 91 48192837
Email: info@infrasupport.in www.infrasupport.in

DRAWN	SK	PROJECT:	Detailed Project Report (DPR) for Construction of Elevated Corridors of Package 1
DESIGNED	NNK	NAME OF WORK	Construction of 4-Lane Flyover on Bellary Road from UAS Staff Quarters to Mekhri Circle, Bengaluru
CHECKED	TRL		
DATE	Dec - 2025	TITLE :	Tunnel Plan & Profile
SHEET	1 of 7	SCALE: As shown	DRG. NO. : IS \ 2501 \ HIG \PP - 1

JOB NO. 2501

REVISION R0

\\infraserver\DESIGNS\#Project\DPR PROJECT\40. Elevated Corridor\Drawings\Tunnel\Plan\Plan & Profile.dwg

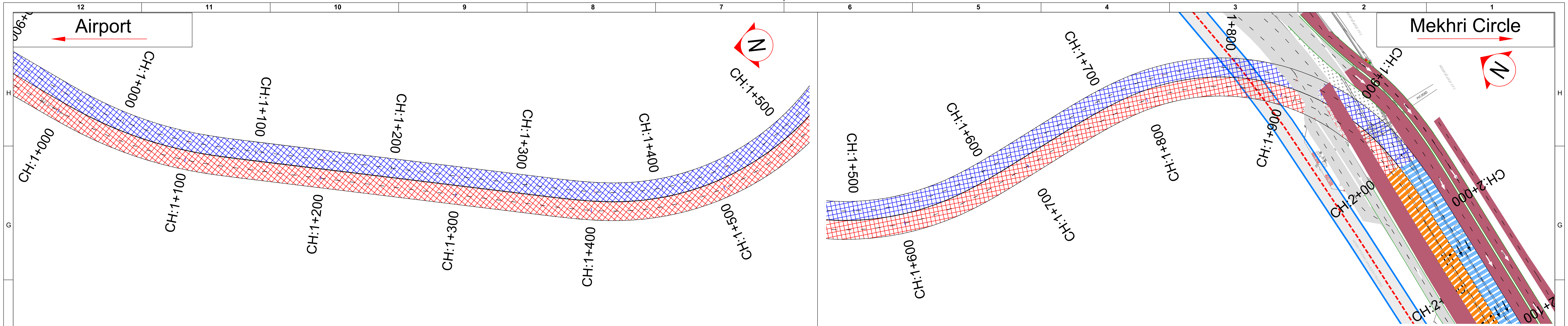

PLAN

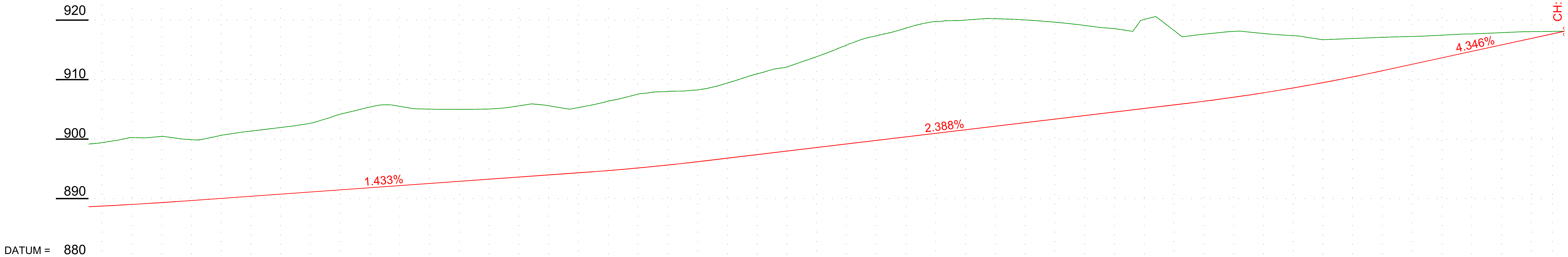

Chainage	Proposed Levels (m)	Existing Levels (m)	Level Difference (m)
1+000	888.742	899.404	-10.662
1+025	889.015	900.259	-11.244
1+050	889.325	900.452	-11.127
1+075	889.672	899.909	-10.237
1+100	890.030	900.639	-10.609
1+125	890.389	901.341	-10.952
1+150	890.747	901.951	-11.204
1+175	891.105	902.654	-11.549
1+200	891.463	904.177	-12.714
1+225	891.822	905.391	-13.570
1+250	892.180	905.506	-13.326
1+275	892.538	905.040	-12.502
1+300	892.896	905.000	-12.104
1+325	893.255	905.056	-11.802
1+350	893.613	905.590	-11.977
1+375	893.971	905.606	-11.635
1+400	894.330	905.304	-10.974
1+425	894.708	906.397	-11.689
1+450	895.145	907.545	-12.399
1+475	895.642	908.022	-12.380
1+500	896.199	908.267	-12.068
1+525	896.795	909.422	-12.627
1+550	897.392	910.972	-13.580
1+575	897.989	912.128	-14.139
1+600	898.586	913.864	-15.277
1+625	899.184	915.786	-16.603
1+650	899.781	917.367	-17.586
1+675	900.378	918.648	-18.271
1+700	900.975	919.753	-18.778
1+725	901.572	920.008	-18.436
1+750	902.169	920.237	-18.068
1+775	902.766	920.028	-17.262
1+800	903.363	919.650	-16.287
1+825	903.960	919.107	-15.147
1+850	904.557	918.569	-14.012
1+875	905.154	920.113	-14.959
1+900	905.751	918.260	-12.509
1+925	906.359	917.630	-11.271
1+950	907.033	918.102	-11.068
1+975	907.779	917.752	-9.972
2+000	908.598	917.387	-8.788
2+025	909.490	916.715	-7.225
2+050	910.454	916.909	-6.455
2+075	911.490	917.110	-5.620
2+100	912.576	917.255	-4.680
2+125	913.662	917.473	-3.811
2+150	914.749	917.680	-2.931
2+175	915.835	917.892	-2.057
2+200	916.922	918.064	-1.142
2+225	918.008	918.123	-0.115
2+228		918.130	

Proposed Horizontal Alignment Schematic: Ls=40 | L=81.07, R=300.0, △-15.483 | Ls=40 | L=217.506 | Ls=60 | L=214.22, R=200.0, △-61.369 | Ls=60 | L=32.228 | Ls=80 | L=163.90, R=155.0, △-60.587 | Ls=80 | L=174.728

Proposed Vertical Alignment Schematic: L= 70.0m, R= 16858m, K= 169 | L= 334.63m, 1.43% | L= 100.0m, R= 10470m, K= 105 | L= 406.67m, 2.39% | L= 168.7m, R= 8615m, K= 86 | L= 148.09m, 4.35%

Superelevation: % / % | e:5.00% / e:-5.00% | e:2.00% / e:-2.00% | e:5.00% / e:-5.00% | e:5.00% / e:-5.00% | e:2.00% / e:-2.00%

PROFILE

SI NO.	DESCRIPTION	REVISION.	BY	DATE

RELEASED FOR
- ☐ Draft Detailed Project Report
- ☒ Detailed Project Report
- ☐ TENDER

CLIENT :
Bengaluru Smart Infrastructure Limited
Office of the Project Engineer-1, B-Smile,
Room No.108, 1st Floor, Annexe-2 Building,
N.R.Square, BBMP Bengaluru-560002

CONSULTANT:
Infra Support
Your Complete Engineering Partner
INFRA SUPPORT ENGINEERING CONSULTANTS PVT. LTD
An ISO 9001-2015 Certified Company
Infra House, #456/11/1, Hennur Bande,
Hennur Bagalur Main Road, Kalyan Nagar,
Bangalore - 560 043.
Phone: +91 91 48192837
Email: info@infrasupport.in www.infrasupport.in

DRAWN	SK	PROJECT:	Detailed Project Report (DPR) for Construction of Elevated Corridors of Package 1	
DESIGNED	NNK	NAME OF WORK	Construction of 4-Lane Flyover on Bellary Road from UAS Staff Quarters to Mekhri Circle, Bengaluru	JOB NO. 2501
CHECKED	TRL			
DATE	Dec - 2025	TITLE :	Tunnel Plan & Profile	REVISION
SHEET	2 of 7	SCALE: As shown	DRG. NO. : IS \ 2501 \ HIG \PP - 2	R0

\\infraserver\DESIGNS\#Project\DPR PROJECT\40. Elevated Corridor\Drawings\Tunnel\Plan\Plan & Profile.dwg

Airport

Mekhri Circle

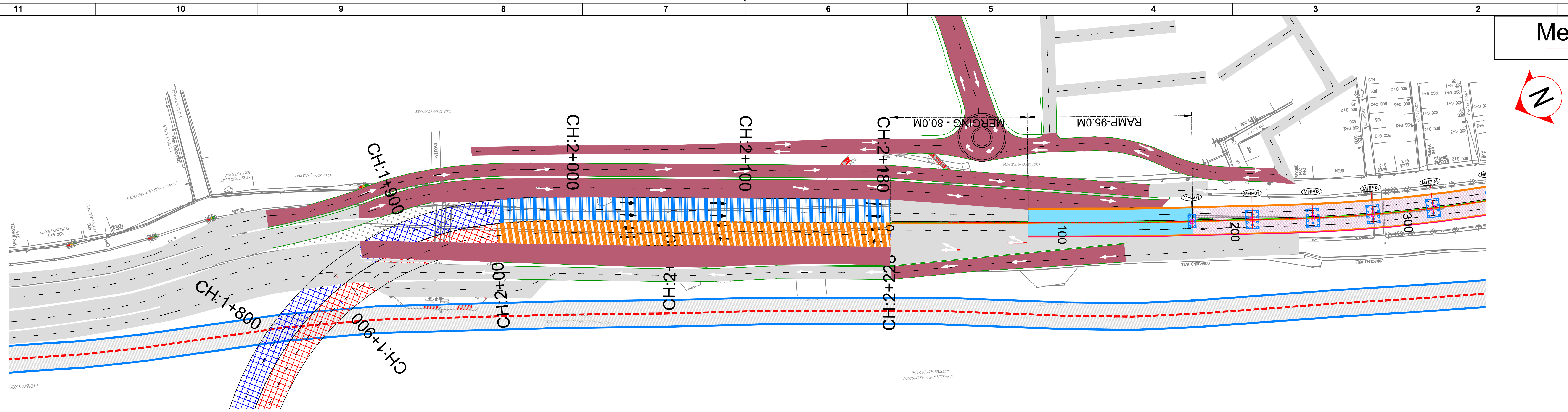

PLAN

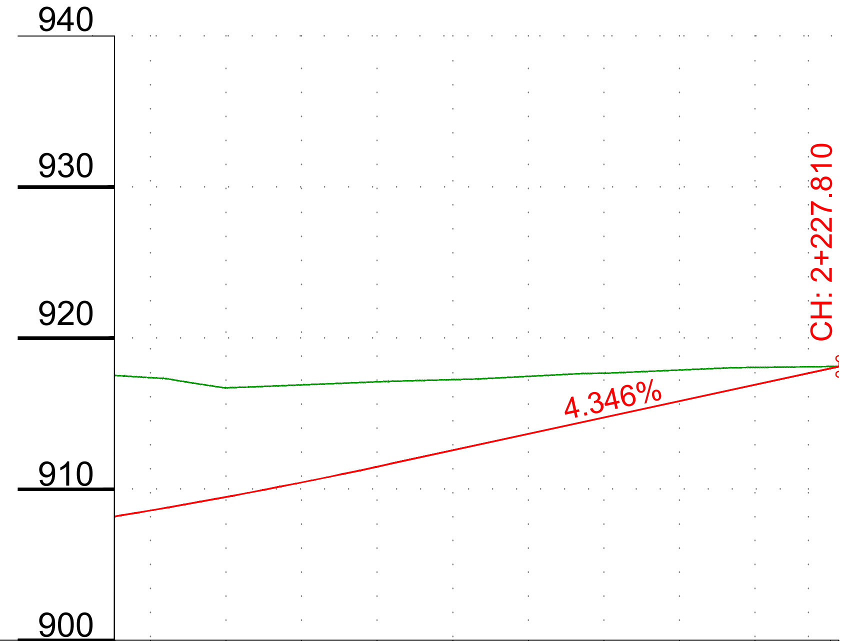

Chainage	2+000	2+025	2+050	2+075	2+100	2+125	2+150	2+175	2+200	2+225	2+228
Proposed Levels (m)	908.598	909.490	910.454	911.490	912.576	913.662	914.749	915.835	916.922	918.008	
Existing Levels (m)	917.387	916.715	916.909	917.110	917.255	917.473	917.680	917.892	918.064	918.123	918.130
Level Difference (m)	-8.788	-7.225	-6.455	-5.620	-4.680	-3.811	-2.931	-2.057	-1.142	-0.115	
Proposed Horizontal Alignment Schematic	Ls=80			L=174.728							
Proposed Vertical Alignment Schematic	168.7m 8615m = 86				L= 148.09m 4.35%						
Superelevation							e:2.00% e:-2.00%				

PROFILE

SI NO.	DESCRIPTION	REVISION.	BY	DATE

RELEASED FOR
- ☐ Draft Detailed Project Report
- ☒ Detailed Project Report
- ☐ TENDER

CLIENT :
Bengaluru Smart Infrastructure Limited
Office of the Project Engineer-1, B-Smile,
Room No.108, 1st Floor, Annexe-2 Building,
N.R.Square, BBMP Bengaluru-560002

CONSULTANT:
Infra Support
Your Complete Engineering Partner
INFRA SUPPORT ENGINEERING CONSULTANTS PVT. LTD
An ISO 9001-2015 Certified Company
Infra House, #456/11/1, Hennur Bande,
Hennur Bagalur Main Road, Kalyan Nagar,
Bangalore - 560 043.
Phone: +91 91 48192837
Email: info@infrasupport.in www.infrasupport.in

DRAWN	SK	PROJECT:	Detailed Project Report (DPR) for Construction of Elevated Corridors of Package 1
DESIGNED	NNK	NAME OF WORK	Construction of 4-Lane Flyover on Bellary Road from UAS Staff Quarters to Mekhri Circle, Bengaluru
CHECKED	TRL		
DATE	Dec - 2025	TITLE :	Tunnel Plan & Profile
SHEET	3 of 7	SCALE:	As shown — DRG. NO. : IS \ 2501 \ HIG \PP - 3

JOB NO. 2501

REVISION R0

\\infraserver\DESIGNS\#Project\DPR PROJECT\40. Elevated Corridor\Drawings\Tunnel\Plan\Plan & Profile.dwg

Airport ← | Mekhri Circle →

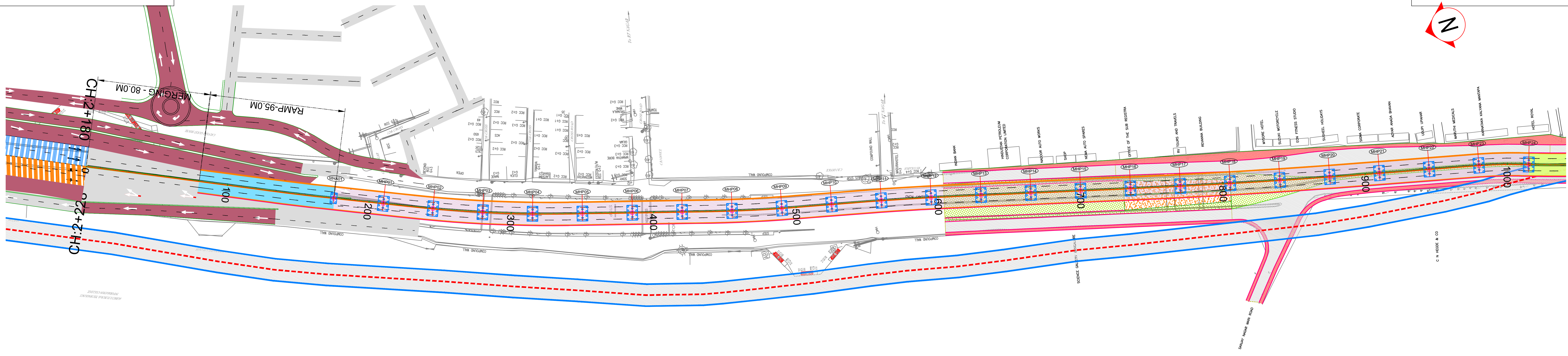

PLAN

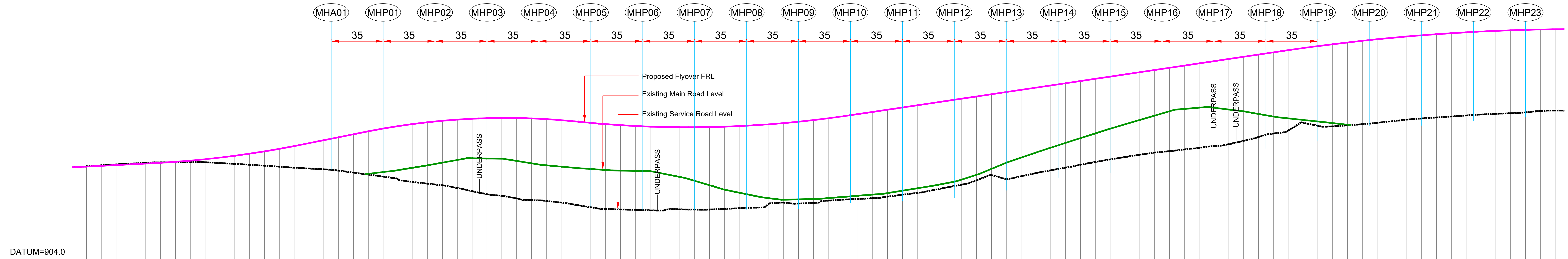

CHAINAGE	EXISTING ROAD/ GROUND LEVEL	EXISTING ROAD/ GROUND LEVEL	FINISHED ROAD LEVEL	LEVEL DIFF.
0	916.749	916.749	916.771	0.091
10	916.892	916.892	916.871	0.083
20	917.036	917.036	916.971	0.081
30	917.159	917.159	917.071	0.128
40	917.265	917.265	917.171	0.174
50	917.375	917.375	917.271	0.223
60	917.425	917.425	917.375	0.304
70	917.447	917.447	917.505	0.423
80	917.477	917.477	917.665	0.591
90	917.446	917.446	917.856	0.901
100	917.337	917.337	918.076	1.241
110	917.228	917.228	918.326	1.586
120	917.109	917.109	918.607	1.942
130	916.988	916.988	918.917	2.336
140	916.853	916.853	919.257	2.784
150	916.719	916.719	919.628	3.241
160	916.606	916.606	920.024	3.774
170	916.495	916.495	920.424	4.295
180	916.319	916.319	920.824	4.842
190	916.050	916.050	921.224	5.499
200	915.929	915.781	921.623	6.096
210	916.126	915.512	921.993	6.711
220	916.384	915.146	922.321	7.263
230	916.711	914.789	922.606	7.750
240	917.037	914.557	922.849	8.224
250	917.398	914.335	923.049	8.717
260	917.756	913.972	923.207	9.173
270	917.983	913.545	923.323	9.733
280	917.952	913.143	923.396	10.177
290	917.924	912.918	923.427	10.590
300	917.622	912.567	923.415	10.981
310	917.300	912.327	923.361	11.323
320	917.032	912.232	923.265	11.355
330	916.855	912.010	923.126	11.383
340	916.679	911.701	922.946	11.440
350	916.539	911.370	922.756	11.421
360	916.404	911.131	922.590	11.337
370	916.319	911.079	922.451	11.369
380	916.282	911.027	922.340	11.292
390	916.246	910.960	922.256	11.209
400	915.858	911.000	922.199	11.087
410	915.465	911.091	922.170	11.005
420	914.937	911.062	922.168	10.980
430	914.345	911.072	922.193	10.947
440	913.749	911.157	922.245	10.901
450	913.340	911.242	922.325	10.900
460	912.932	911.322	922.432	10.915
470	912.600	911.855	922.566	10.955
480	912.393	911.992	922.728	11.034
490	912.443	911.879	922.917	11.151
500	912.493	911.966	923.133	11.314
510	912.609	912.277	923.376	11.488
520	912.769	912.399	923.647	11.582
530	912.928	912.504	923.942	11.656
540	913.087	912.589	924.239	11.724
550	913.285	912.809	924.537	11.722
560	913.609	913.067	924.834	11.677
570	913.932	913.315	925.132	11.721
580	914.258	913.659	925.429	11.683
590	914.633	914.049	925.727	11.644
600	915.113	914.429	926.024	11.586
610	915.760	915.003	926.322	11.399
620	916.552	915.719	926.620	11.212
630	917.383	915.172	926.917	11.071
640	918.074	915.555	927.215	11.066
650	918.756	915.984	927.512	11.063
660	919.412	916.361	927.810	10.986
670	920.060	916.726	928.107	10.878
680	920.702	917.107	928.405	10.779
690	921.339	917.485	928.703	10.746
700	921.971	917.829	929.000	10.726
710	922.564	918.151	929.298	10.715
720	923.157	918.464	929.595	10.677
730	923.739	918.752	929.893	10.775
740	924.325	918.938	930.190	10.910
750	924.645	919.178	930.488	10.951
760	924.812	919.388	930.786	11.088
770	924.805	919.622	931.083	11.183
780	924.562	919.880	931.381	11.059
790	924.318	920.330	931.678	10.934
800	923.967	920.850	931.976	10.926
810	923.619	921.318	932.273	10.823
820	923.369	921.722	932.569	10.749
830	923.156	922.789	932.851	10.810
840	922.944	922.371	933.118	10.902
850	922.731	922.283	933.371	10.991
860	922.803	922.427	933.608	11.132
870	922.578	922.578	933.831	11.147
880	922.770	922.770	934.040	11.137
890	922.980	922.980	934.233	11.131
900	923.206	923.206	934.412	11.162
910	923.354	923.354	934.576	11.215
920	923.490	923.490	934.725	11.259
930	923.615	923.615	934.860	11.309
940	923.760	923.760	934.980	11.321
950	923.888	923.888	935.085	11.301
960	923.989	923.989	935.175	11.252
970	924.053	924.053	935.251	11.190
980	924.178	924.178	935.312	11.168
990	924.354	924.354	935.358	11.154
1000	924.417	924.417	935.389	11.120

VERTICAL ALIGNMENT	G=1.000% L=54.897; R=3333.334 L=100.000; G=4.000% L=43.028; R=−2358.635 L=140.000; G=−1.936% L=6.920; R=3665.014 L=180.000; G=2.976% L=289.609; R=−6783.155 L=250.000
HORIZONTAL ALIGNMENT	D=134.114; R=-1200.000 L=28.812; D=67.010; R=-900.000 L=111.270; D=98.061; R=-900.000 L=55.923; D=49.213; R=2000.000 L=68.039; D=122.696; R=-5000.000 L=161.367; D=83.098; R=300.000 L=28; D

PROFILE

SI NO.	DESCRIPTION	REVISION.	BY	DATE

RELEASED FOR
- ☐ Draft Detailed Project Report
- ☒ Detailed Project Report
- ☐ TENDER

CLIENT :

Bengaluru Smart Infrastructure Limited
Office of the Project Engineer-1, B-Smile,
Room No.108, 1st Floor, Annexe-2 Building,
N.R.Square, BBMP Bengaluru-560002

CONSULTANT:

Infra Support
Your Complete Engineering Partner

INFRA SUPPORT ENGINEERING CONSULTANTS PVT. LTD
An ISO 9001-2015 Certified Company
Infra House, #456/11/1, Hennur Bande,
Hennur Bagalur Main Road, Kalyan Nagar,
Bangalore - 560 043.
Phone: +91 91 48192837
Email: info@infrasupport.in www.infrasupport.in

DRAWN	SK	PROJECT:	Detailed Project Report (DPR) for Construction of Elevated Corridors of Package 1
DESIGNED	NNK	NAME OF WORK	Construction of 4-Lane Flyover on Bellary Road from UAS Staff Quarters to Mekhri Circle, Bengaluru
CHECKED	TRL		
DATE	Dec - 2025	TITLE :	Elevated Corridor Plan & Profile
SHEET	4 of 7	SCALE: As shown	DRG. NO. : IS \ 2501 \ HIG \PP - 4

JOB NO. 2501
REVISION R0

\\infraserver\DESIGNS\#Project\DPR PROJECT\40. Elevated Corridor\Drawings\Tunnel\Plan\Plan & Profile.dwg

Airport

Mekhri Circle

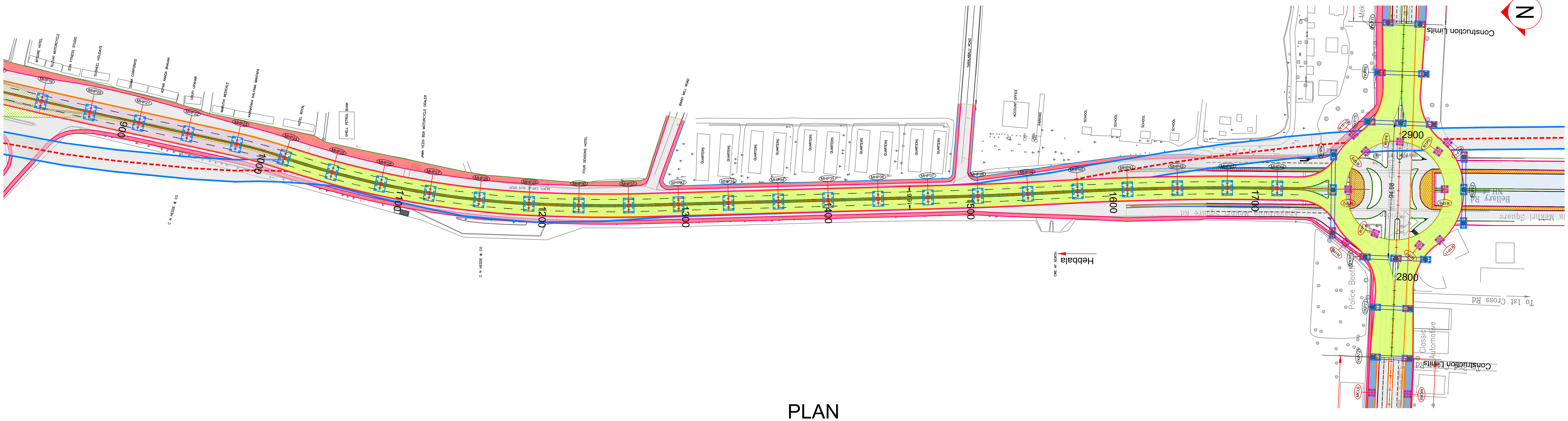

PLAN

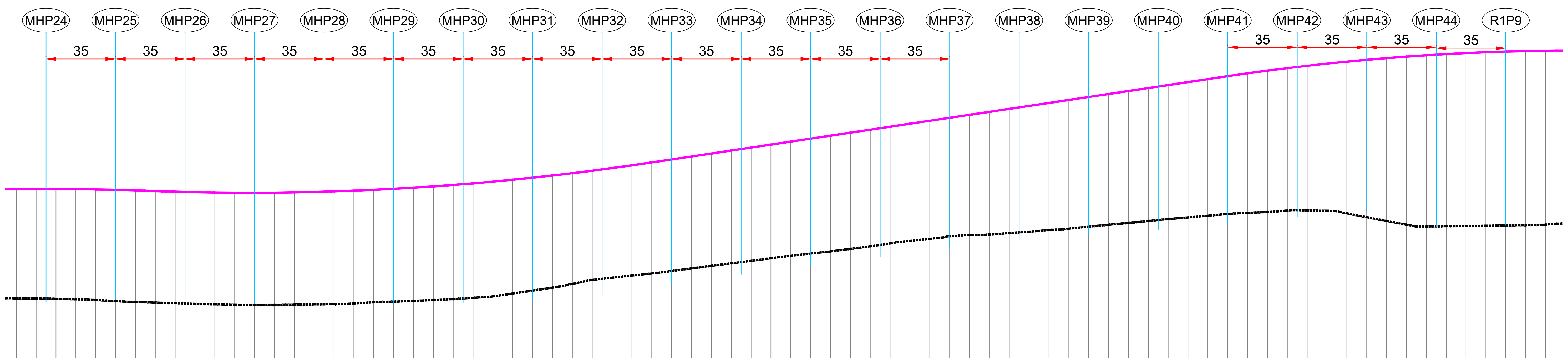

DATUM =

CHAINAGE	EXISTING ROAD/ GROUND LEVEL	FINISHED ROAD LEVEL	LEVEL DIFF.
1000	924.417	935.389	11.120
1010	924.410	935.406	11.057
1020	924.370	935.408	10.967
1030	924.319	935.395	10.932
1040	924.247	935.368	10.929
1050	924.138	935.325	10.924
1060	924.052	935.268	11.074
1070	923.988	935.199	11.076
1080	923.936	935.136	11.117
1090	923.864	935.089	11.178
1100	923.817	935.056	11.244
1110	923.768	935.038	11.247
1120	923.732	935.035	11.246
1130	923.753	935.047	11.254
1140	923.781	935.073	11.260
1150	923.810	935.115	11.229
1160	923.828	935.171	11.214
1170	923.900	935.242	11.208
1180	924.021	935.327	11.206
1190	924.089	935.428	11.202
1200	924.160	935.543	11.215
1210	924.243	935.673	11.243
1220	924.343	935.818	11.283
1230	924.469	935.978	11.278
1240	924.611	936.152	11.158
1250	924.903	936.342	11.018
1260	925.197	936.546	10.886
1270	925.494	936.765	10.763
1280	925.871	936.998	10.669
1290	926.279	937.247	10.662
1300	926.494	937.510	10.698
1310	926.709	937.788	10.755
1320	926.915	938.081	10.804
1330	927.162	938.380	10.827
1340	927.428	938.680	10.855
1350	927.693	938.979	10.948
1360	927.942	939.278	11.137
1370	928.191	939.577	11.298
1380	928.446	939.876	11.344
1390	928.692	940.175	11.416
1400	928.919	940.474	11.485
1410	929.131	940.773	11.534
1420	929.391	941.072	11.560
1430	929.652	941.371	11.585
1440	929.939	941.670	11.633
1450	930.196	941.970	11.726
1460	930.402	942.269	11.831
1470	930.655	942.568	11.963
1480	930.801	942.867	12.116
1490	930.833	943.166	12.269
1500	930.977	943.465	12.427
1510	931.120	943.764	12.577
1520	931.292	944.063	12.716
1530	931.424	944.362	12.812
1540	931.616	944.661	12.910
1550	931.809	944.960	12.984
1560	932.001	945.260	13.059
1570	932.189	945.559	13.160
1580	932.390	945.858	13.306
1590	932.552	946.157	13.452
1600	932.721	946.456	13.526
1610	932.908	946.754	13.719
1620	933.007	947.040	13.945
1630	933.102	947.309	14.218
1640	933.254	947.561	14.460
1650	933.255	947.796	14.649
1660	933.224	948.015	15.009
1670	932.964	948.216	15.591
1680	932.572	948.401	16.145
1690	932.196	948.569	16.629
1700	931.818	948.720	17.096
1710	931.638	948.855	17.459
1720	931.662	948.972	17.751
1730	931.690	949.073	17.848
1740	931.718	949.157	17.802
1750	931.746	949.224	17.714
1760	931.774	949.274	
1770	931.824	949.308	
1780	931.952	949.338	

VERTICAL ALIGNMENT: G=−0.710% L=4.696; R=6755.214 L=250.000; G=2.991% L=287.889; R=−5945.939 L=160.000; G=0.3[illegible] L=12.8[illegible]

HORIZONTAL ALIGNMENT: L=28.245; D=14.323; R=-650.000 L=175.159; D=6.969; R=-1000.000 L=67.504; D=221.605; R=-2000.000 L=50.508; D=20.770; R=2000.000 L=41.780; D=5.560; R=2000.000 L=91.877; D=41.653; R=-2500.000 L=12.927; D=21.443

PROFILE

SI NO.	DESCRIPTION	REVISION.	BY	DATE

RELEASED FOR
- [ ] Draft Detailed Project Report
- [x] Detailed Project Report
- [ ] TENDER

CLIENT :
Bengaluru Smart Infrastructure Limited
Office of the Project Engineer-1, B-Smile,
Room No.108, 1st Floor, Annexe-2 Building,
N.R.Square, BBMP Bengaluru-560002

CONSULTANT:
Infra Support
Your Complete Engineering Partner
INFRA SUPPORT ENGINEERING CONSULTANTS PVT. LTD
An ISO 9001-2015 Certified Company
Infra House, #456/11/1, Hennur Bande,
Hennur Bagalur Main Road, Kalyan Nagar,
Bangalore - 560 043.
Phone: +91 91 48192837
Email: info@infrasupport.in www.infrasupport.in

DRAWN	SK	PROJECT:	Detailed Project Report (DPR) for Construction of Elevated Corridors of Package 1
DESIGNED	NNK	NAME OF WORK	Construction of 4-Lane Flyover on Bellary Road from UAS Staff Quarters to Mekhri Circle, Bengaluru
CHECKED	TRL		
DATE	Dec - 2025	TITLE :	Elevated Corridor Plan & Profile
SHEET	5 of 7	SCALE: As shown	DRG. NO. : IS \ 2501 \ HIG \PP - 5

JOB NO. 2501

REVISION R0

\\infraserver\DESIGNS\#Project\DPR PROJECT\40. Elevated Corridor\Drawings\Tunnel\Plan\Plan & Profile.dwg

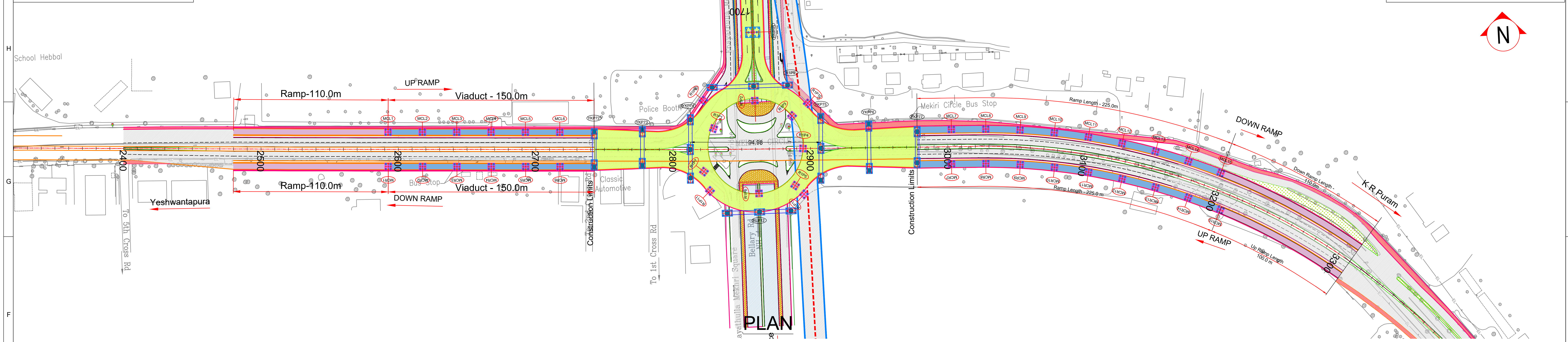

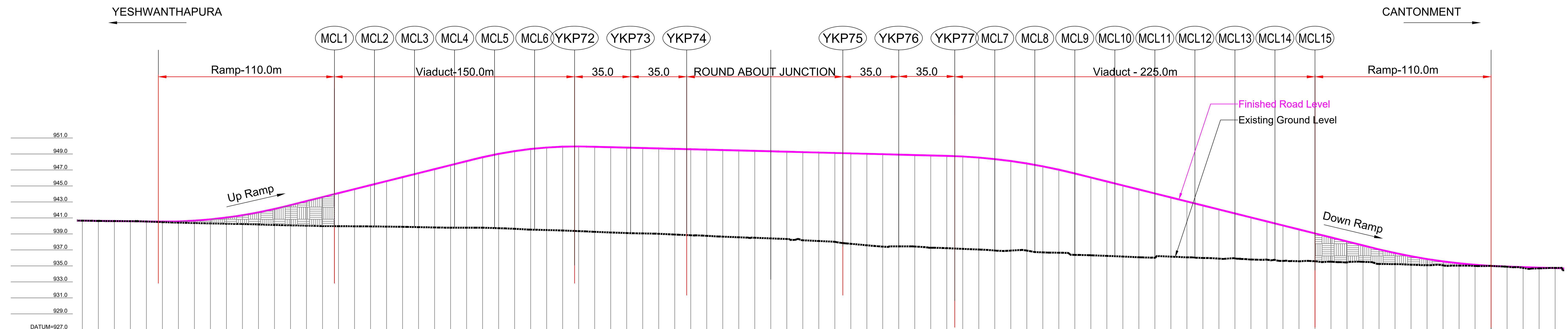

CHAINAGE	EXISTING ROAD/ GROUND LEVEL	FINISHED ROAD LEVEL	LEVEL DIFF.
2430	940.668	940.664	-0.004
2440	940.632	940.640	0.008
2450	940.616	940.615	-0.001
2460	940.604	940.591	-0.014
2470	940.557	940.566	0.009
2480	940.483	940.545	0.062
2490	940.419	940.574	0.155
2500	940.369	940.668	0.299
2510	940.323	940.828	0.505
2520	940.283	941.054	0.770
2530	940.245	941.345	1.099
2540	940.188	941.701	1.513
2550	940.131	942.123	1.992
2560	940.083	942.608	2.526
2570	940.042	943.108	3.067
2580	939.992	943.608	3.616
2590	939.976	944.108	4.132
2600	939.960	944.608	4.648
2610	939.945	945.108	5.163
2620	939.923	945.608	5.686
2630	939.896	946.108	6.212
2640	939.856	946.608	6.753
2650	939.815	947.108	7.294
2660	939.791	947.608	7.817
2670	939.788	948.108	8.320
2680	939.783	948.598	8.816
2690	939.723	949.020	9.296
2700	939.647	949.362	9.716
2710	939.545	949.626	10.082
2720	939.493	949.811	10.319
2730	939.435	949.917	10.482
2740	939.358	949.945	10.587
2750	939.269	949.903	10.634
2760	939.183	949.852	10.669
2770	939.116	949.801	10.684
2780	939.070	949.749	10.680
2790	939.022	949.698	10.675
2800	938.930	949.646	10.717
2810	938.836	949.595	10.759
2820	938.768	949.544	10.775
2830	938.669	949.492	10.823
2840	938.586	949.441	10.855
2850	938.525	949.389	10.864
2860	938.449	949.338	10.890
2870	938.370	949.287	10.917
2880	938.213	949.235	11.023
2890	938.120	949.184	11.063
2900	938.021	949.132	11.111
2910	937.774	949.081	11.307
2920	937.587	949.030	11.443
2930	937.421	948.978	11.557
2940	937.450	948.927	11.476
2950	937.435	948.875	11.441
2960	937.275	948.824	11.550
2970	937.223	948.773	11.549
2980	937.137	948.693	11.557
2990	937.056	948.558	11.502
3000	936.933	948.366	11.434
3010	936.925	948.118	11.194
3020	936.918	947.815	10.896
3030	936.699	947.455	10.756
3040	936.655	947.039	10.383
3050	936.386	946.567	10.180
3060	936.336	946.067	9.731
3070	936.259	945.567	9.307
3080	936.177	945.067	8.890
3090	936.088	944.567	8.478
3100	936.028	944.067	8.038
3110	936.165	943.567	7.401
3120	936.072	943.067	6.995
3130	935.997	942.567	6.569
3140	935.918	942.067	6.149
3150	935.945	941.567	5.621
3160	935.807	941.067	5.260
3170	935.784	940.567	4.782
3180	935.634	940.067	4.433
3190	935.588	939.567	3.979
3200	935.583	939.067	3.484
3210	935.528	938.567	3.039
3220	935.445	938.067	2.622
3230	935.515	937.567	2.051
3240	935.254	937.069	1.816
3250	935.225	936.613	1.387
3260	935.155	936.210	1.056
3270	935.090	935.862	0.771
3280	935.070	935.568	0.498
3290	935.042	935.328	0.286
3300	934.999	935.142	0.143
3310	935.003	935.010	0.007
3320	934.898	934.930	0.033
3330	934.753	934.864	0.110
3340	934.697	934.797	0.099
3350	934.754	934.730	-0.024

VERTICAL ALIGNMENT: 3.283 | R=1525.334 L=80.000 | G=5.000% L=118.145 | R=-1269.496 L=70.000 | G=-0.514% L=224.982 | R=-1783.326 L=80.000 | G=-5.000% L=187.002 | R=1846.155 L=80.000

HORIZONTAL ALIGNMENT: 39.817 | R=-2500.000 L=8.860 | D=264.937 | R=-5000.000 L=66.130 | D=157.635 | R=460.000 L=416.641

LHS UPRAMP PROFILE

LHS DOWN RAMP PROFILE

SI NO.	DESCRIPTION	REVISION.	BY	DATE

RELEASED FOR
- Draft Detailed Project Report
- Detailed Project Report (selected)
- TENDER

CLIENT :
Bengaluru Smart Infrastructure Limited
Office of the Project Engineer-1, B-Smile,
Room No.108, 1st Floor, Annexe-2 Building,
N.R.Square, BBMP Bengaluru-560002

CONSULTANT:
Infra Support
Your Complete Engineering Partner
INFRA SUPPORT ENGINEERING CONSULTANTS PVT. LTD
An ISO 9001-2015 Certified Company
Infra House, #456/11/1, Hennur Bande,
Hennur Bagalur Main Road, Kalyan Nagar,
Bangalore - 560 043.
Phone: +91 91 48192837
Email: info@infrasupport.in www.infrasupport.in

DRAWN	SK	PROJECT:	Detailed Project Report (DPR) for Construction of Elevated Corridors of Package 1
DESIGNED	NNK	NAME OF WORK	Construction of 4-Lane Flyover on Bellary Road from UAS Staff Quarters to Mekhri Circle, Bengaluru
CHECKED	TRL		
DATE	Dec - 2025	TITLE :	Elevated Corridor Plan & Profile
SHEET	6 of 7	SCALE: As shown	DRG. NO. : IS \ 2501 \ HIG \PP - 6

JOB NO. 2501
REVISION R0

\\infraserver\DESIGNS\#Project\DPR PROJECT\40. Elevated Corridor\Drawings\Tunnel\Plan\Plan & Profile.dwg

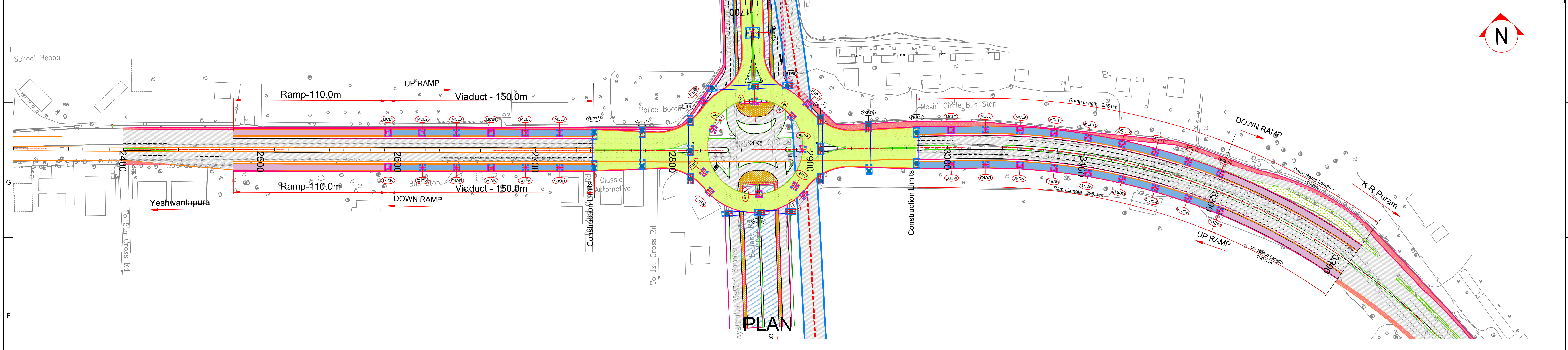

YESHWANTHAPURA

CANTONMENT

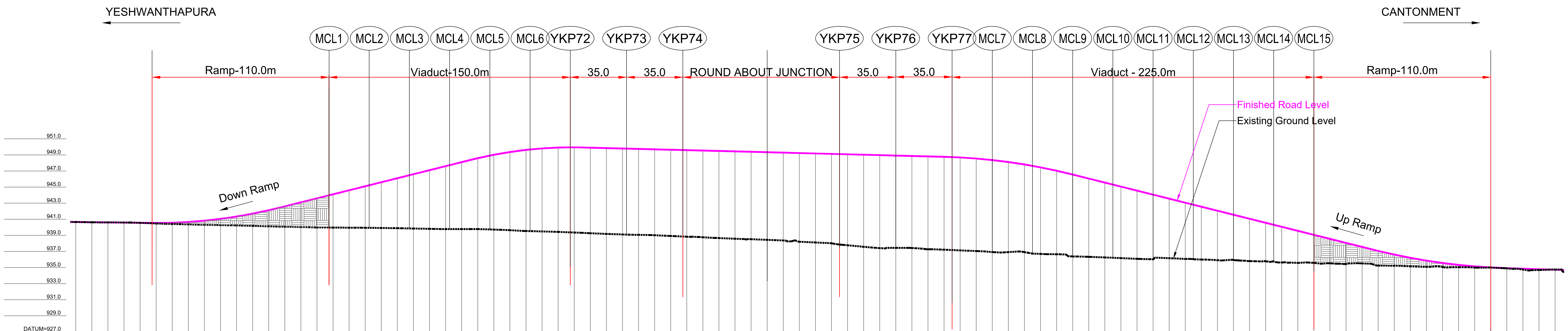

CHAINAGE	EXISTING ROAD/ GROUND LEVEL	FINISHED ROAD LEVEL	LEVEL DIFF.
2430	940.668	940.664	-0.004
2440	940.632	940.640	0.008
2450	940.616	940.615	-0.001
2460	940.604	940.591	-0.014
2470	940.557	940.566	0.009
2480	940.483	940.545	0.062
2490	940.419	940.574	0.155
2500	940.369	940.668	0.299
2510	940.323	940.828	0.505
2520	940.283	941.054	0.770
2530	940.245	941.345	1.099
2540	940.188	941.701	1.513
2550	940.131	942.123	1.992
2560	940.083	942.608	2.526
2570	940.042	943.108	3.067
2580	939.992	943.608	3.616
2590	939.976	944.108	4.132
2600	939.960	944.608	4.648
2610	939.945	945.108	5.163
2620	939.923	945.608	5.686
2630	939.896	946.108	6.212
2640	939.856	946.608	6.753
2650	939.815	947.108	7.294
2660	939.791	947.608	7.817
2670	939.788	948.108	8.320
2680	939.783	948.598	8.816
2690	939.723	949.020	9.296
2700	939.647	949.362	9.716
2710	939.545	949.626	10.082
2720	939.493	949.811	10.319
2730	939.435	949.917	10.482
2740	939.358	949.945	10.587
2750	939.269	949.903	10.634
2760	939.183	949.852	10.669
2770	939.116	949.801	10.684
2780	939.070	949.749	10.680
2790	939.022	949.698	10.675
2800	938.930	949.646	10.717
2810	938.836	949.595	10.759
2820	938.768	949.544	10.775
2830	938.669	949.492	10.823
2840	938.586	949.441	10.855
2850	938.525	949.389	10.864
2860	938.449	949.338	10.890
2870	938.370	949.287	10.917
2880	938.213	949.235	11.023
2890	938.120	949.184	11.063
2900	938.021	949.132	11.111
2910	937.774	949.081	11.307
2920	937.587	949.030	11.443
2930	937.421	948.978	11.557
2940	937.450	948.927	11.476
2950	937.435	948.875	11.441
2960	937.275	948.824	11.550
2970	937.223	948.773	11.549
2980	937.137	948.693	11.557
2990	937.056	948.558	11.502
3000	936.933	948.366	11.434
3010	936.925	948.118	11.194
3020	936.918	947.815	10.896
3030	936.699	947.455	10.756
3040	936.655	947.039	10.383
3050	936.386	946.567	10.180
3060	936.336	946.067	9.731
3070	936.259	945.567	9.307
3080	936.177	945.067	8.890
3090	936.088	944.567	8.478
3100	936.028	944.067	8.038
3110	936.165	943.567	7.401
3120	936.072	943.067	6.995
3130	935.997	942.567	6.569
3140	935.918	942.067	6.149
3150	935.945	941.567	5.621
3160	935.807	941.067	5.260
3170	935.784	940.567	4.782
3180	935.634	940.067	4.433
3190	935.588	939.567	3.979
3200	935.583	939.067	3.484
3210	935.528	938.567	3.039
3220	935.445	938.067	2.622
3230	935.515	937.567	2.051
3240	935.254	937.069	1.816
3250	935.225	936.613	1.387
3260	935.155	936.210	1.056
3270	935.090	935.862	0.771
3280	935.070	935.568	0.498
3290	935.042	935.328	0.286
3300	934.999	935.142	0.143
3310	935.003	935.010	0.007
3320	934.898	934.930	0.033
3330	934.753	934.864	0.110
3340	934.697	934.797	0.099
3350	934.754	934.730	-0.024

VERTICAL ALIGNMENT: .283 | R=1525.334 L=80.000 | G=5.000% L=118.145 | R=-1269.496 L=70.000 | G=-0.514% L=224.982 | R=-1783.326 L=80.000 | G=-5.000% L=187.002 | R=1846.155 L=80.000

HORIZONTAL ALIGNMENT: 39.817 | R=-2500.000 L=8.860 | D=264.937 | R=-5000.000 L=66.130 | D=157.635 | R=460.000 L=416.641

RHS DOWN RAMP PROFILE

RHS UP RAMP PROFILE

SI NO.	DESCRIPTION	REVISION.	BY	DATE

RELEASED FOR
- ☐ Draft Detailed Project Report
- ☒ Detailed Project Report
- ☐ TENDER

CLIENT :

Bengaluru Smart Infrastructure Limited
Office of the Project Engineer-1, B-Smile,
Room No.108, 1st Floor, Annexe-2 Building,
N.R.Square, BBMP Bengaluru-560002

CONSULTANT:
Infra Support
Your Complete Engineering Partner
INFRA SUPPORT ENGINEERING CONSULTANTS PVT. LTD
An ISO 9001-2015 Certified Company
Infra House, #456/11/1, Hennur Bande,
Hennur Bagalur Main Road, Kalyan Nagar,
Bangalore - 560 043.
Phone: +91 91 48192837
Email: info@infrasupport.in www.infrasupport.in

DRAWN	SK	PROJECT:	Detailed Project Report (DPR) for Construction of Elevated Corridors of Package 1
DESIGNED	NNK	NAME OF WORK	Construction of 4-Lane Flyover on Bellary Road from UAS Staff Quarters to Mekhri Circle, Bengaluru
CHECKED	TRL		
DATE	Dec - 2025	TITLE :	Elevated Corridor Plan & Profile
SHEET	7 of 7	SCALE: As shown	DRG. NO. : IS \ 2501 \ HIG \PP - 7

JOB NO. 2501
REVISION R0

\\infraserver\DESIGNS\#Project\DPR PROJECT\40. Elevated Corridor\Drawings\Tunnel\Plan\Plan & Profile.dwg

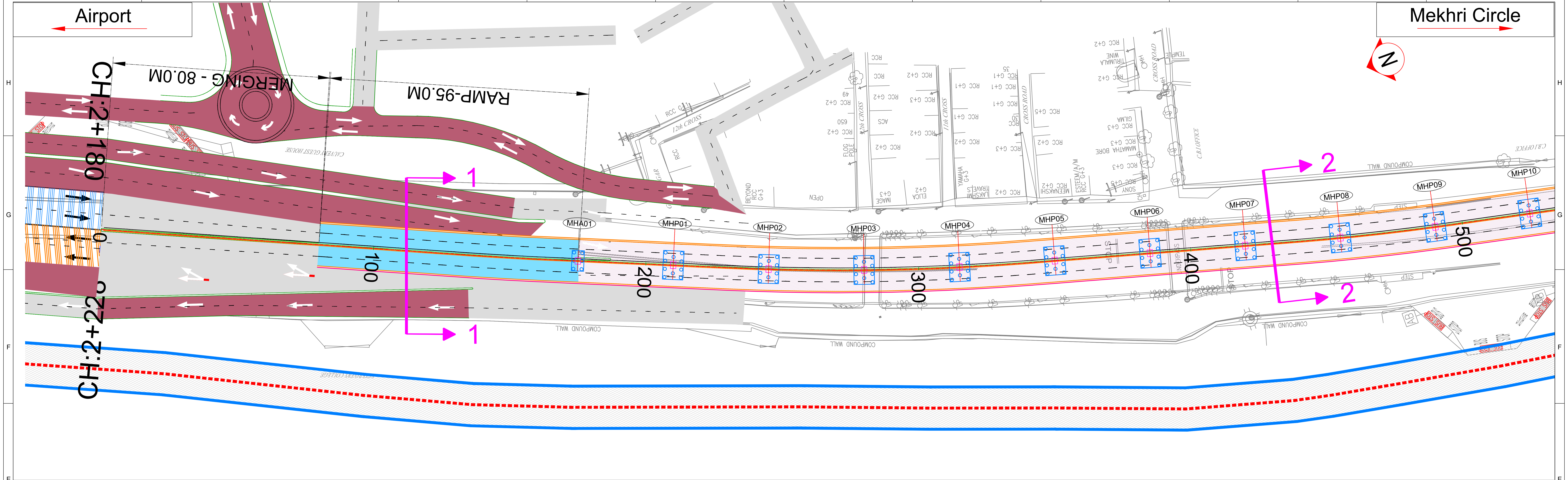

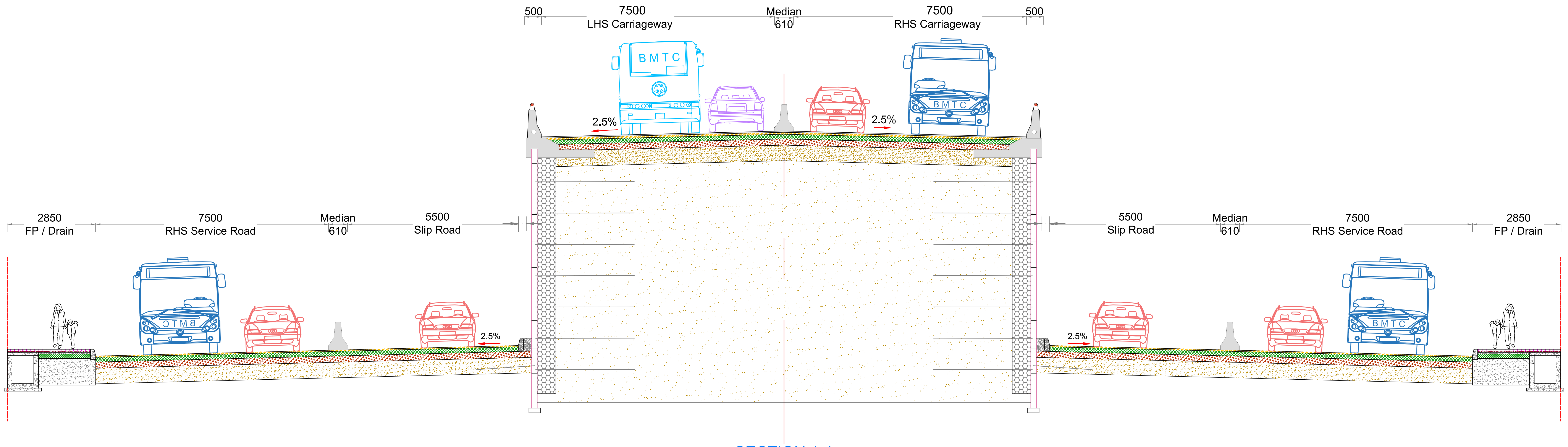

SECTION:1-1

SI NO.	DESCRIPTION	REVISION.	BY	DATE

RELEASED FOR
- ☐ Draft Detailed Project Report
- ☒ Detailed Project Report
- ☐ TENDER

CLIENT :

Bengaluru Smart Infrastructure Limited
Office of the Project Engineer-1, B-Smile,
Room No.108, 1st Floor, Annexe-2 Building,
N.R.Square, BBMP Bengaluru-560002

CONSULTANT:

Infra Support
Your Complete Engineering Partner

INFRA SUPPORT ENGINEERING CONSULTANTS PVT. LTD
An ISO 9001-2015 Certified Company
Infra House, #456/11/1, Hennur Bande,
Hennur Bagalur Main Road, Kalyan Nagar,
Bangalore - 560 043.
Phone: +91 91 48192837
Email: info@infrasupport.in www.infrasupport.in

DRAWN	SK	PROJECT:	Detailed Project Report (DPR) for Construction of Elevated Corridors of Package 1
DESIGNED	NNK	NAME OF WORK	Construction of 4-Lane Flyover on Bellary Road from UAS Staff Quarters to Mekhri Circle, Bengaluru
CHECKED	TRL		
DATE	Dec - 2025	TITLE :	GENERAL ARRANGEMENT DRAWING
SHEET	01 of 06	SCALE: As shown	DRG. NO. : IS \ 2501 \ HIG \GAD- 01

JOB NO. 2501

REVISION R0

\\infraserver\designs\#Project\DPR PROJECT\40. Elevated Corridor\Drawings\Tunnel\Plan\GAD MEKHRI.dwg

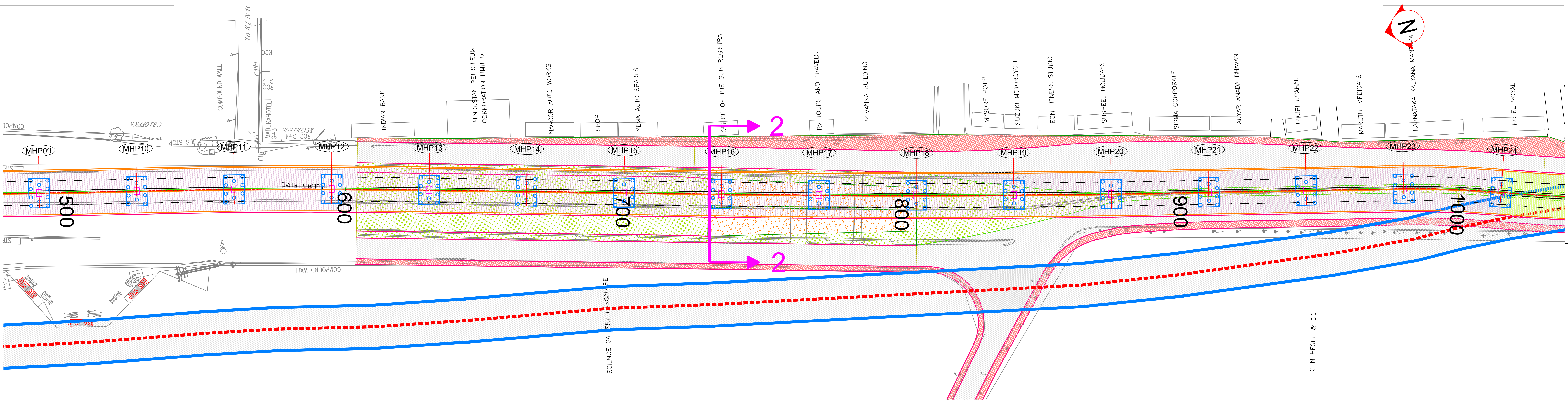

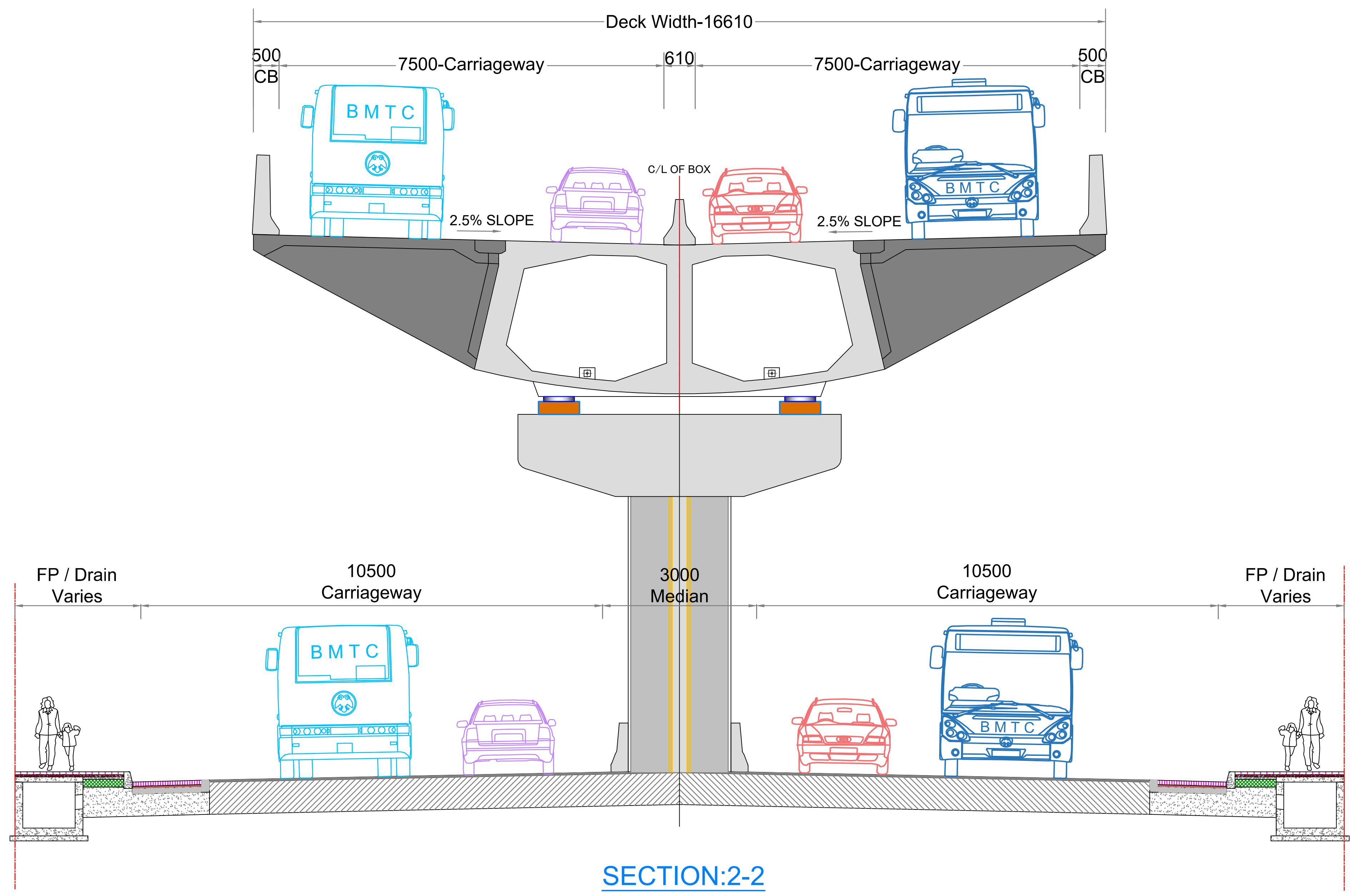

SECTION:2-2

SI NO.	DESCRIPTION	REVISION.	BY	DATE

RELEASED FOR
- Draft Detailed Project Report
- Detailed Project Report (selected)
- TENDER

CLIENT :
Bengaluru Smart Infrastructure Limited
Office of the Project Engineer-1, B-Smile, Room No.108, 1st Floor, Annexe-2 Building, N.R.Square, BBMP Bengaluru-560002

CONSULTANT:
Infra Support — Your Complete Engineering Partner
INFRA SUPPORT ENGINEERING CONSULTANTS PVT. LTD
An ISO 9001-2015 Certified Company
Infra House, #456/11/1, Hennur Bande,
Hennur Bagalur Main Road, Kalyan Nagar,
Bangalore - 560 043.
Phone: +91 91 48192837
Email: info@infrasupport.in www.infrasupport.in

DRAWN	SK	PROJECT:	Detailed Project Report (DPR) for Construction of Elevated Corridors of Package 1
DESIGNED	NNK	NAME OF WORK	Construction of 4-Lane Flyover on Bellary Road from UAS Staff Quarters to Mekhri Circle, Bengaluru
CHECKED	TRL		
DATE	Dec - 2025	TITLE :	GENERAL ARRANGEMENT DRAWING
SHEET	02 of 06	SCALE:	As shown — DRG. NO. : IS \ 2501 \ HIG \GAD- 02

JOB NO. 2501
REVISION R0

\\infraserver\designs\#Project\DPR PROJECT\40. Elevated Corridor\Drawings\Tunnel\Plan\GAD MEKHRI.dwg

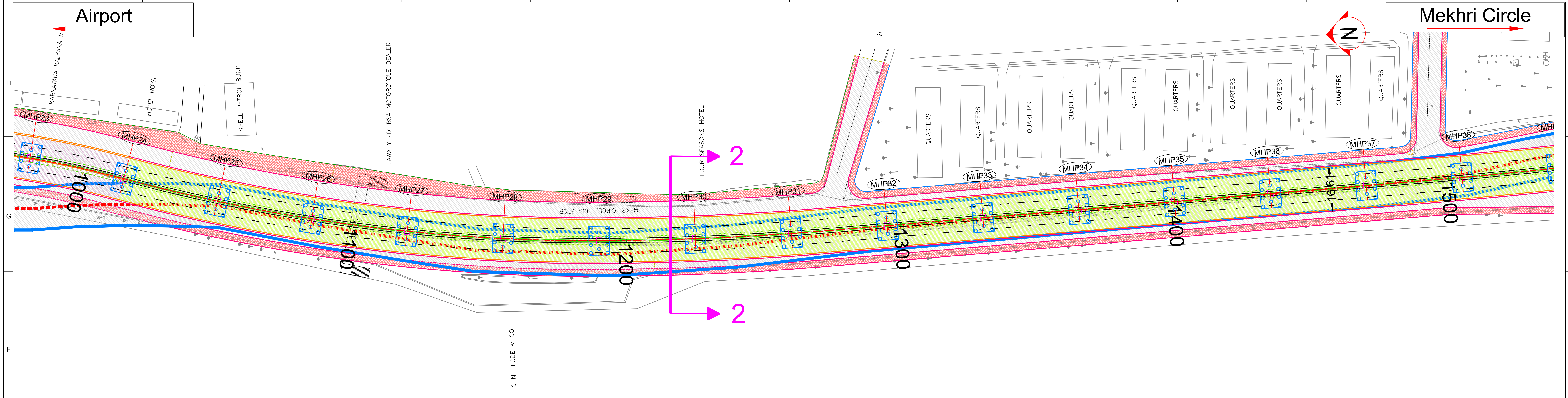

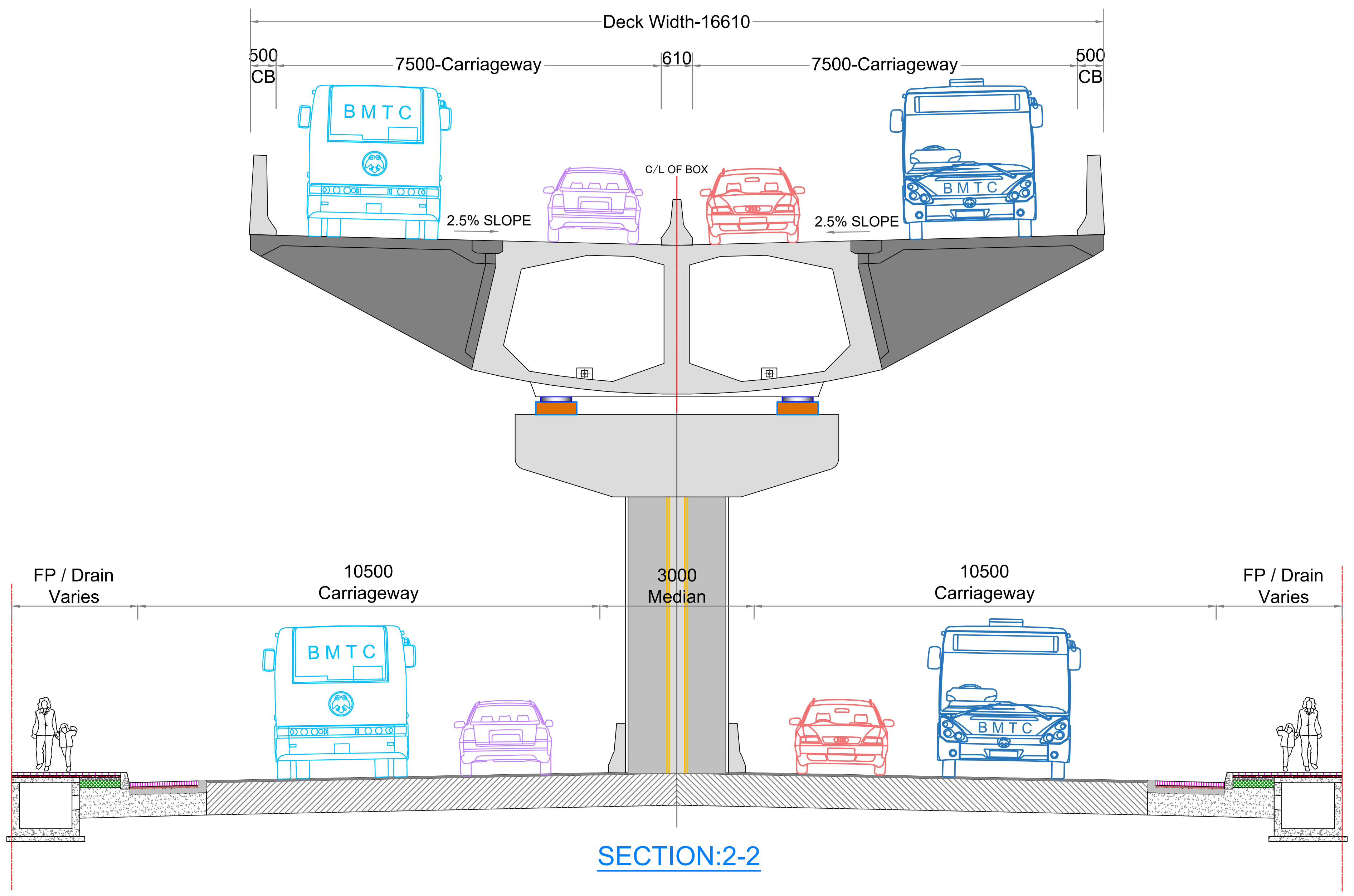

SECTION:2-2

SI NO.	DESCRIPTION	REVISION.	BY	DATE

RELEASED FOR
- ☐ Draft Detailed Project Report
- ☒ Detailed Project Report
- ☐ TENDER

CLIENT :

Bengaluru Smart Infrastructure Limited
Office of the Project Engineer-1, B-Smile,
Room No.108, 1st Floor, Annexe-2 Building,
N.R.Square, BBMP Bengaluru-560002

CONSULTANT:

Infra Support
Your Complete Engineering Partner
INFRA SUPPORT ENGINEERING CONSULTANTS PVT. LTD
An ISO 9001-2015 Certified Company
Infra House, #456/11/1, Hennur Bande,
Hennur Bagalur Main Road, Kalyan Nagar,
Bangalore - 560 043.
Phone: +91 91 48192837
Email: info@infrasupport.in www.infrasupport.in

DRAWN	SK	PROJECT:	Detailed Project Report (DPR) for Construction of Elevated Corridors of Package 1
DESIGNED	NNK	NAME OF WORK	Construction of 4-Lane Flyover on Bellary Road from UAS Staff Quarters to Mekhri Circle, Bengaluru
CHECKED	TRL		
DATE	Dec - 2025	TITLE :	GENERAL ARRANGEMENT DRAWING
SHEET	03 of 06	SCALE:	As shown — DRG. NO. : IS \ 2501 \ HIG \GAD - 03

JOB NO. 2501
REVISION R0

\\infraserver\designs\#Project\DPR PROJECT\40. Elevated Corridor\Drawings\Tunnel\Plan\GAD MEKHRI.dwg

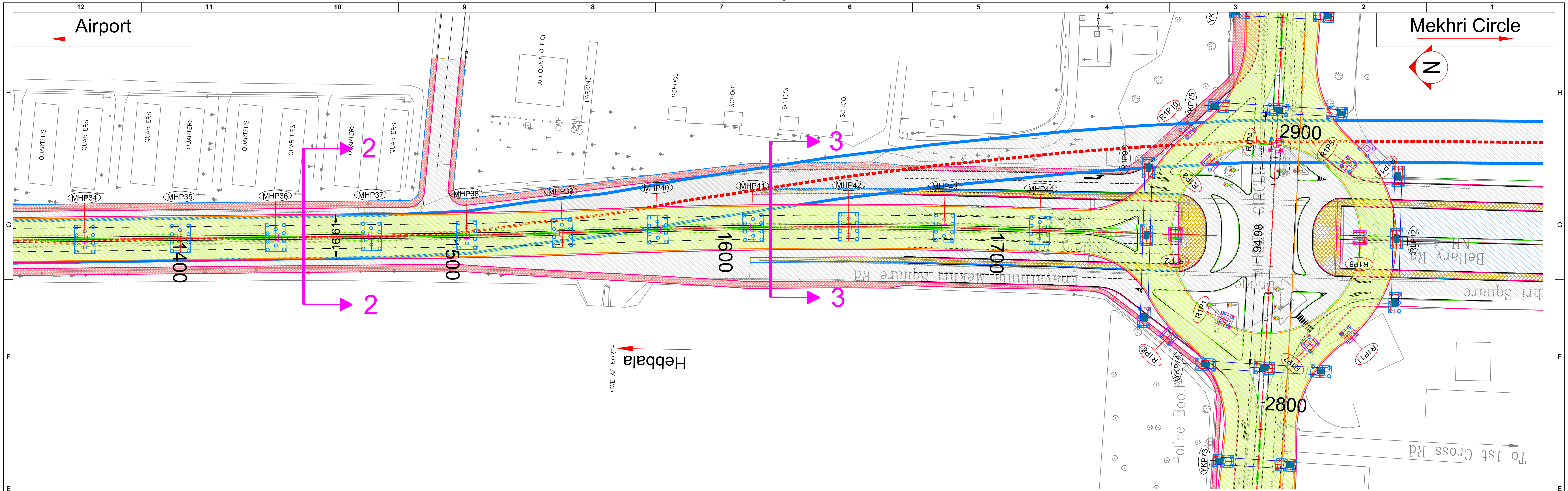

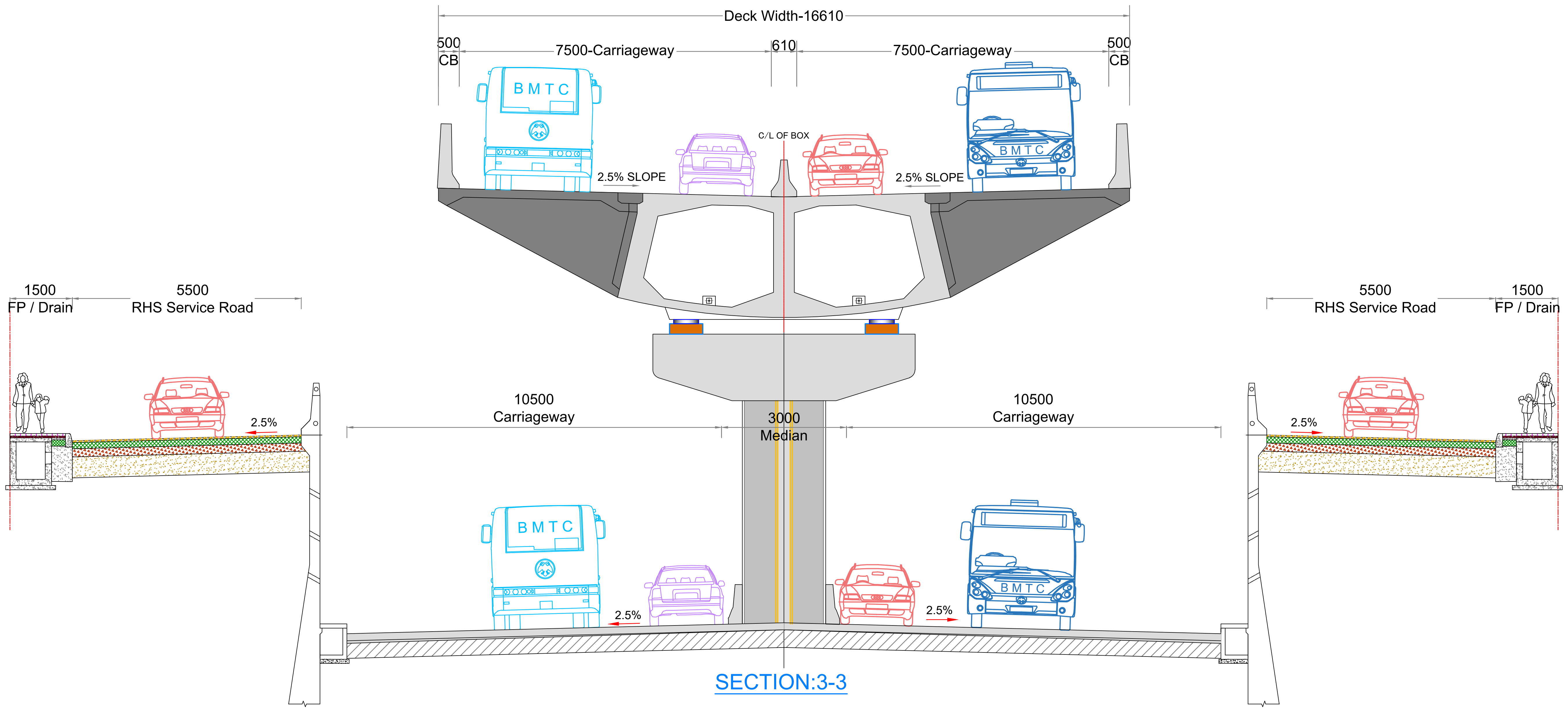

SECTION:3-3

SI NO.	DESCRIPTION	REVISION.	BY	DATE

RELEASED FOR

- [ ] Draft Detailed Project Report
- [x] Detailed Project Report
- [ ] TENDER

CLIENT :

Bengaluru Smart Infrastructure Limited
Office of the Project Engineer-1, B-Smile,
Room No.108, 1st Floor, Annexe-2 Building,
N.R.Square, BBMP Bengaluru-560002

CONSULTANT:

Infra Support
Your Complete Engineering Partner

INFRA SUPPORT ENGINEERING CONSULTANTS PVT. LTD
An ISO 9001-2015 Certified Company
Infra House, #456/11/1, Hennur Bande,
Hennur Bagalur Main Road, Kalyan Nagar,
Bangalore - 560 043.
Phone: +91 91 48192837
Email: info@infrasupport.in www.infrasupport.in

DRAWN	SK	PROJECT:	Detailed Project Report (DPR) for Construction of Elevated Corridors of Package 1
DESIGNED	NNK	NAME OF WORK	Construction of 4-Lane Flyover on Bellary Road from UAS Staff Quarters to Mekhri Circle, Bengaluru
CHECKED	TRL		
DATE	Dec - 2025	TITLE :	GENERAL ARRANGEMENT DRAWING
SHEET	04 of 06	SCALE: As shown	DRG. NO. : IS \ 2501 \ HIG \GAD- 04

JOB NO. 2501

REVISION R0

\\infraserver\designs\#Project\DPR PROJECT\40. Elevated Corridor\Drawings\Tunnel\Plan\GAD MEKHRI.dwg

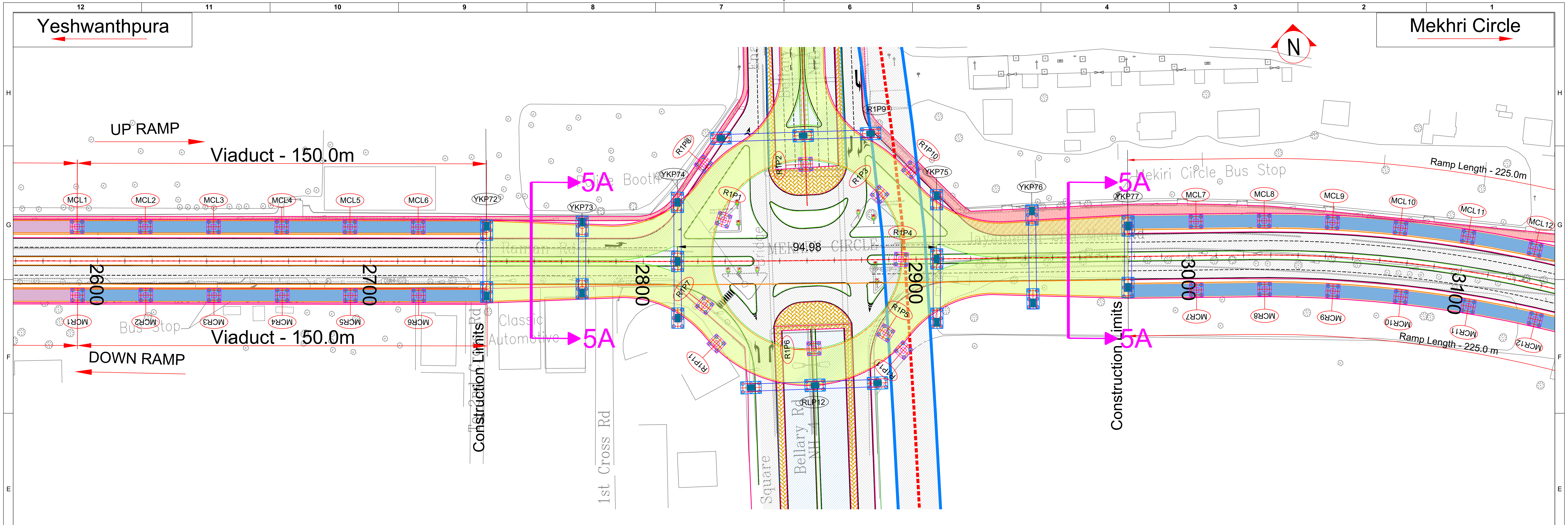

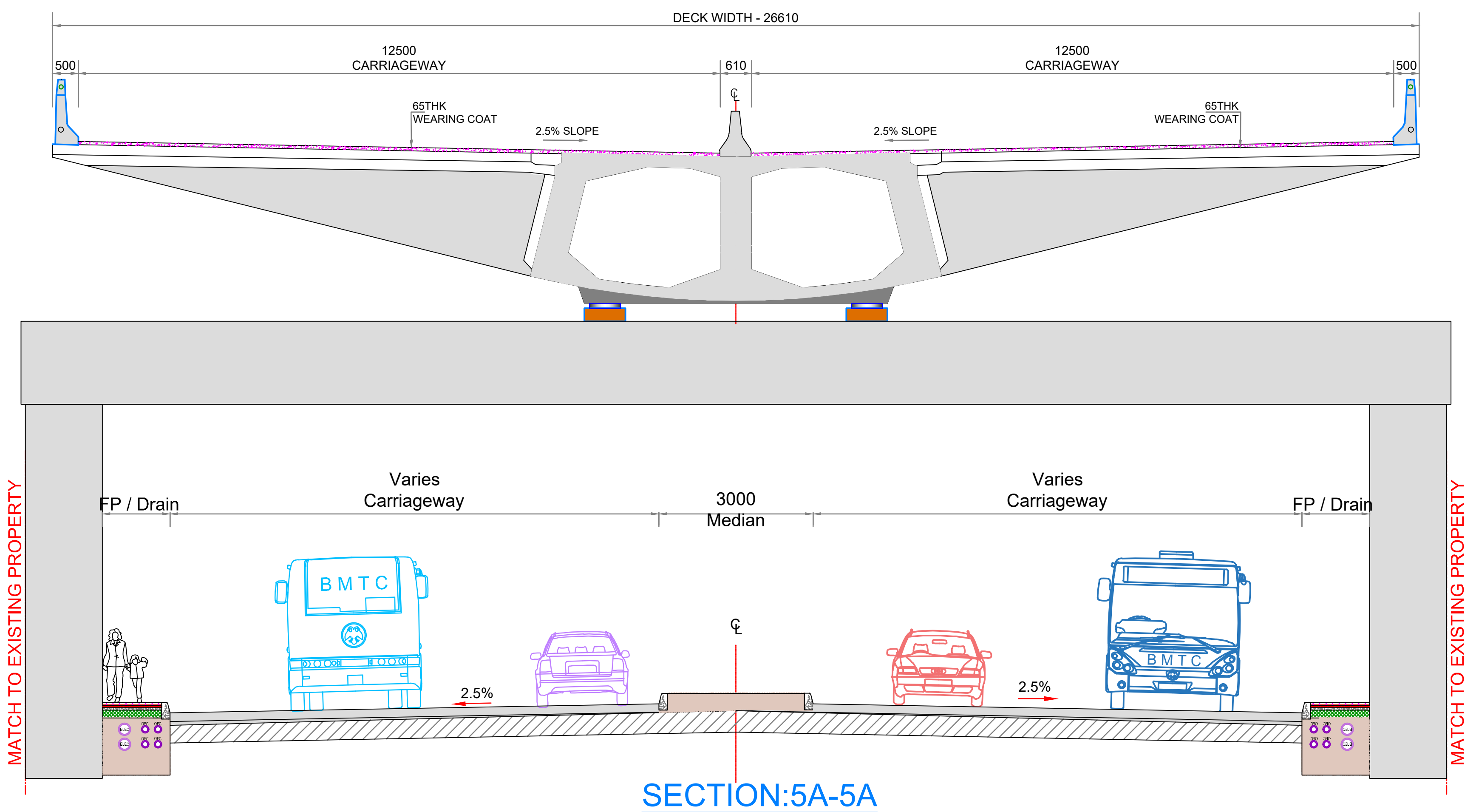

SECTION:5A-5A

SI NO.	DESCRIPTION	REVISION.	BY	DATE

RELEASED FOR

- ☐ Draft Detailed Project Report
- ▩ Detailed Project Report
- ☐ TENDER

CLIENT :

Bengaluru Smart Infrastructure Limited
Office of the Project Engineer-1, B-Smile,
Room No.108, 1st Floor, Annexe-2 Building,
N.R.Square, BBMP Bengaluru-560002

CONSULTANT:

Infra Support
Your Complete Engineering Partner

INFRA SUPPORT ENGINEERING CONSULTANTS PVT. LTD
An ISO 9001-2015 Certified Company
Infra House, #456/11/1, Hennur Bande,
Hennur Bagalur Main Road, Kalyan Nagar,
Bangalore - 560 043.
Phone: +91 91 48192837
Email: info@infrasupport.in www.infrasupport.in

DRAWN	SK	PROJECT:	Detailed Project Report (DPR) for Construction of Elevated Corridors of Package 1	
DESIGNED	NNK	NAME OF WORK	Construction of 4-Lane Flyover on Bellary Road from UAS Staff Quarters to Mekhri Circle, Bengaluru	JOB NO.
CHECKED	TRL			2501
DATE	Dec - 2025	TITLE :	GENERAL ARRANGEMENT DRAWING	REVISION
SHEET	05 of 07	SCALE: As shown	DRG. NO. : IS \ 2501 \ HIG \GAD- 05	R0

\\infraserver\designs\#Project\DPR PROJECT\40. Elevated Corridor\Drawings\Tunnel\Plan\GAD MEKHRI.dwg

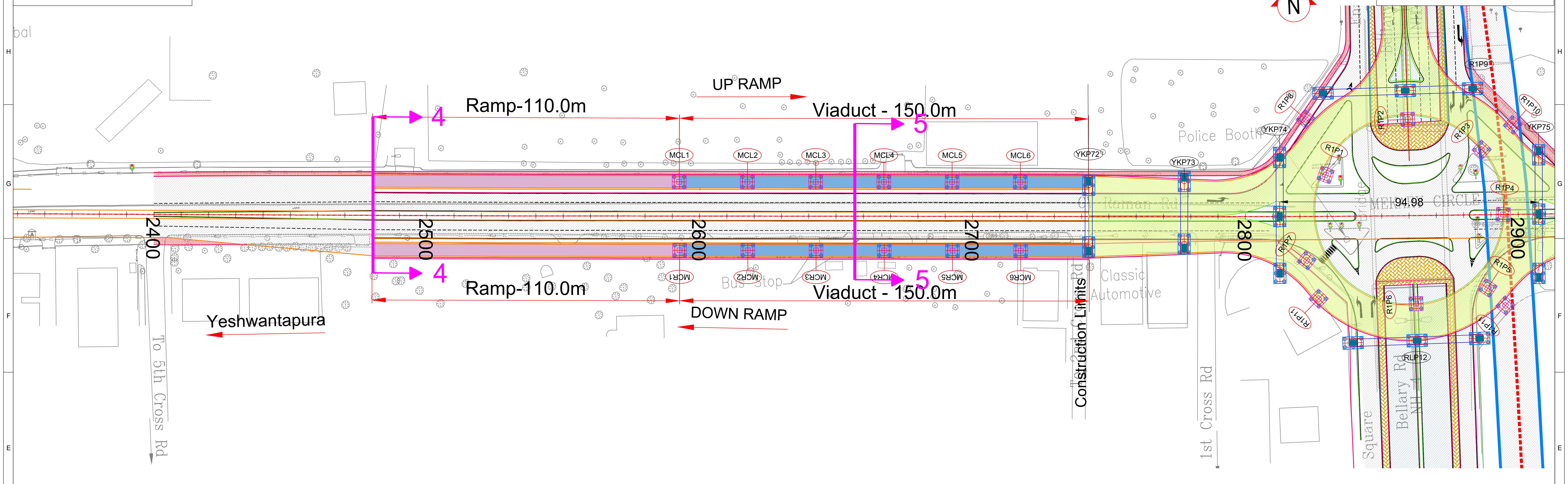

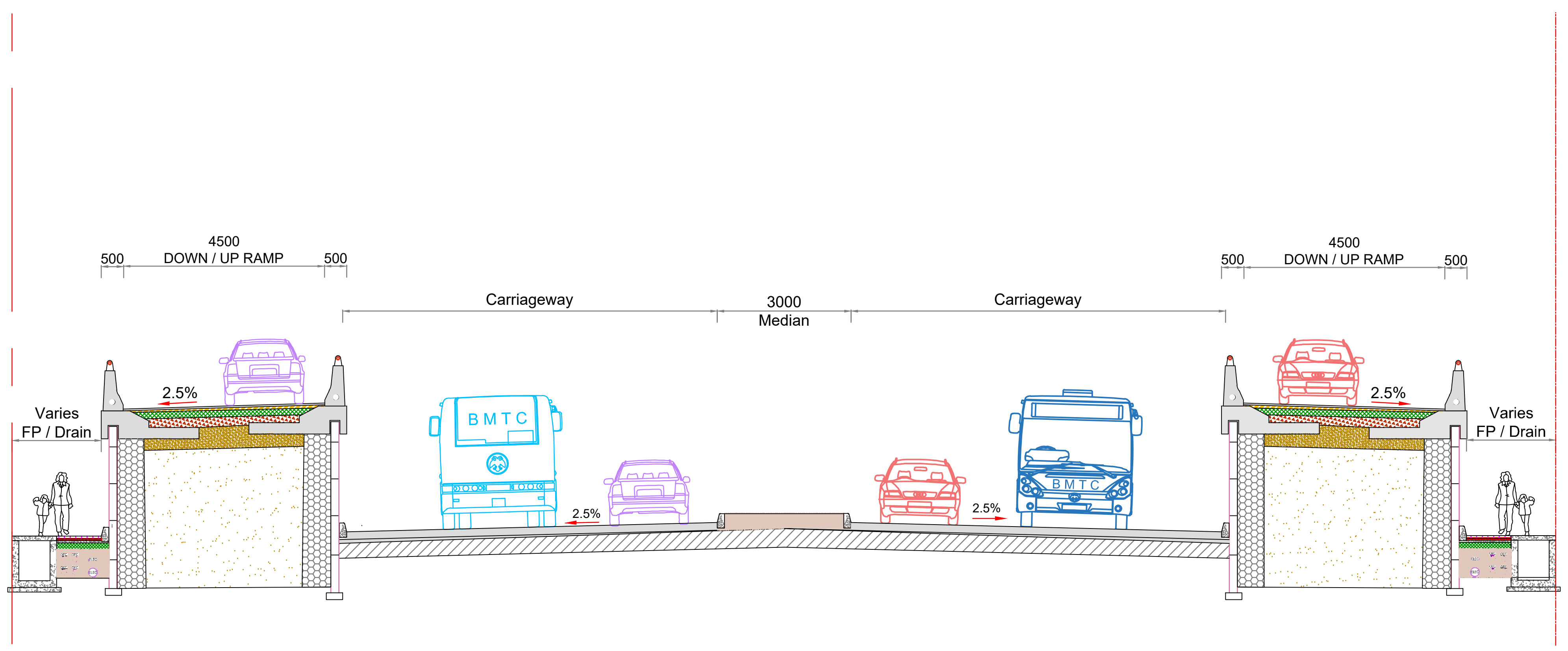

SECTION:4-4

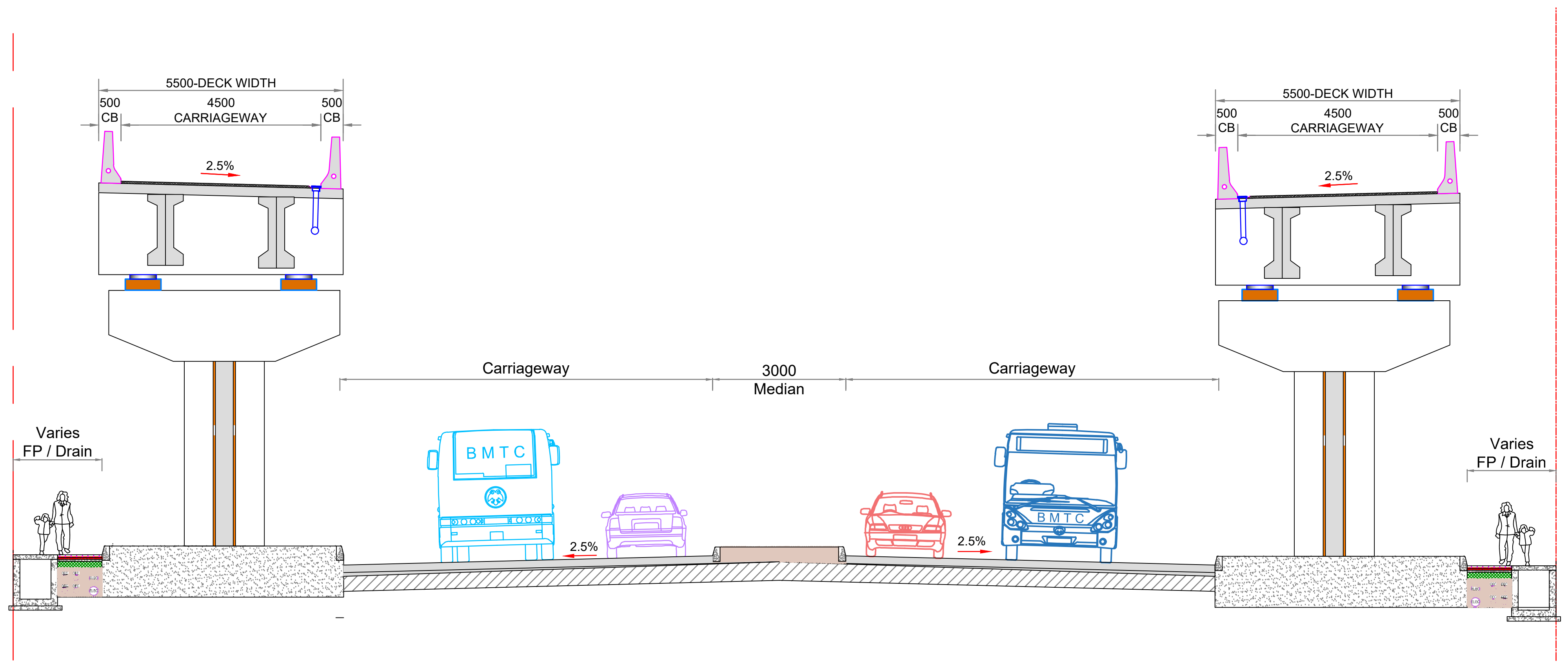

SECTION:5-5

SI NO.	DESCRIPTION	REVISION.	BY	DATE

RELEASED FOR

- ☐ Draft Detailed Project Report
- ☒ Detailed Project Report
- ☐ TENDER

CLIENT :

Bengaluru Smart Infrastructure Limited
Office of the Project Engineer-1, B-Smile,
Room No.108, 1st Floor, Annexe-2 Building,
N.R.Square, BBMP Bengaluru-560002

CONSULTANT:

Infra Support
Your Complete Engineering Partner

INFRA SUPPORT ENGINEERING CONSULTANTS PVT. LTD
An ISO 9001-2015 Certified Company
Infra House, #456/11/1, Hennur Bande,
Hennur Bagalur Main Road, Kalyan Nagar,
Bangalore - 560 043.
Phone: +91 91 48192837
Email: info@infrasupport.in www.infrasupport.in

DRAWN	SK	PROJECT:	Detailed Project Report (DPR) for Construction of Elevated Corridors of Package 1	
DESIGNED	NNK	NAME OF WORK	Construction of 4-Lane Flyover on Bellary Road from UAS Staff Quarters to Mekhri Circle, Bengaluru	JOB NO. 2501
CHECKED	TRL			
DATE	Dec - 2025	TITLE :	GENERAL ARRANGEMENT DRAWING	REVISION
SHEET	06 of 07	SCALE: As shown	DRG. NO. : IS \ 2501 \ HIG \GAD- 06	R0

\\infraserver\designs\#Project\DPR PROJECT\40. Elevated Corridor\Drawings\Tunnel\Plan\GAD MEKHRI.dwg

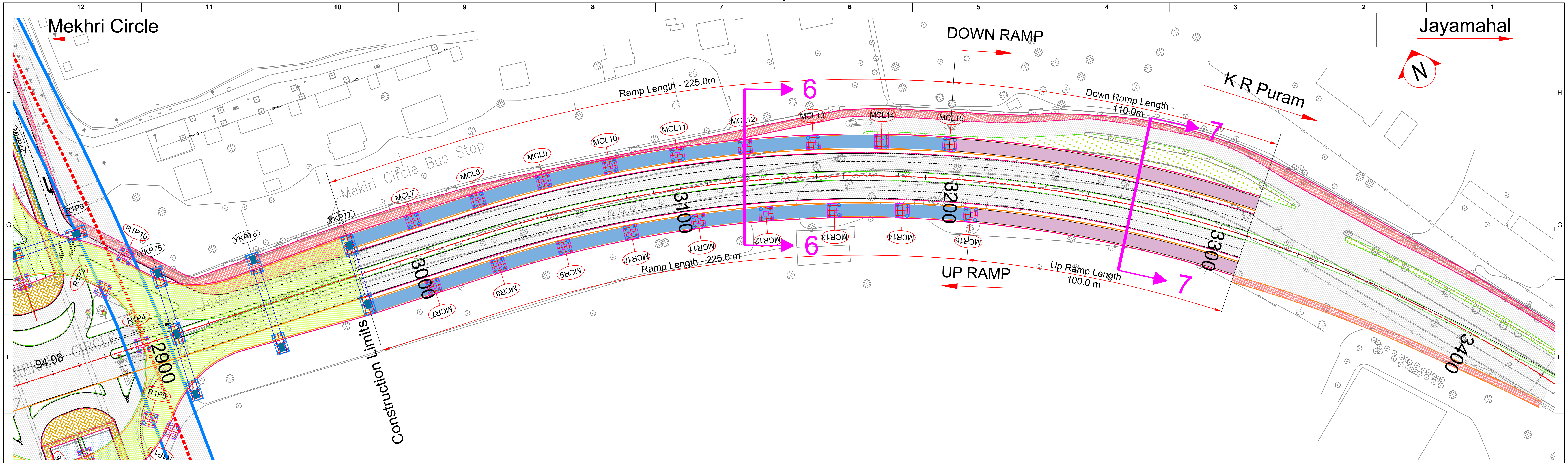

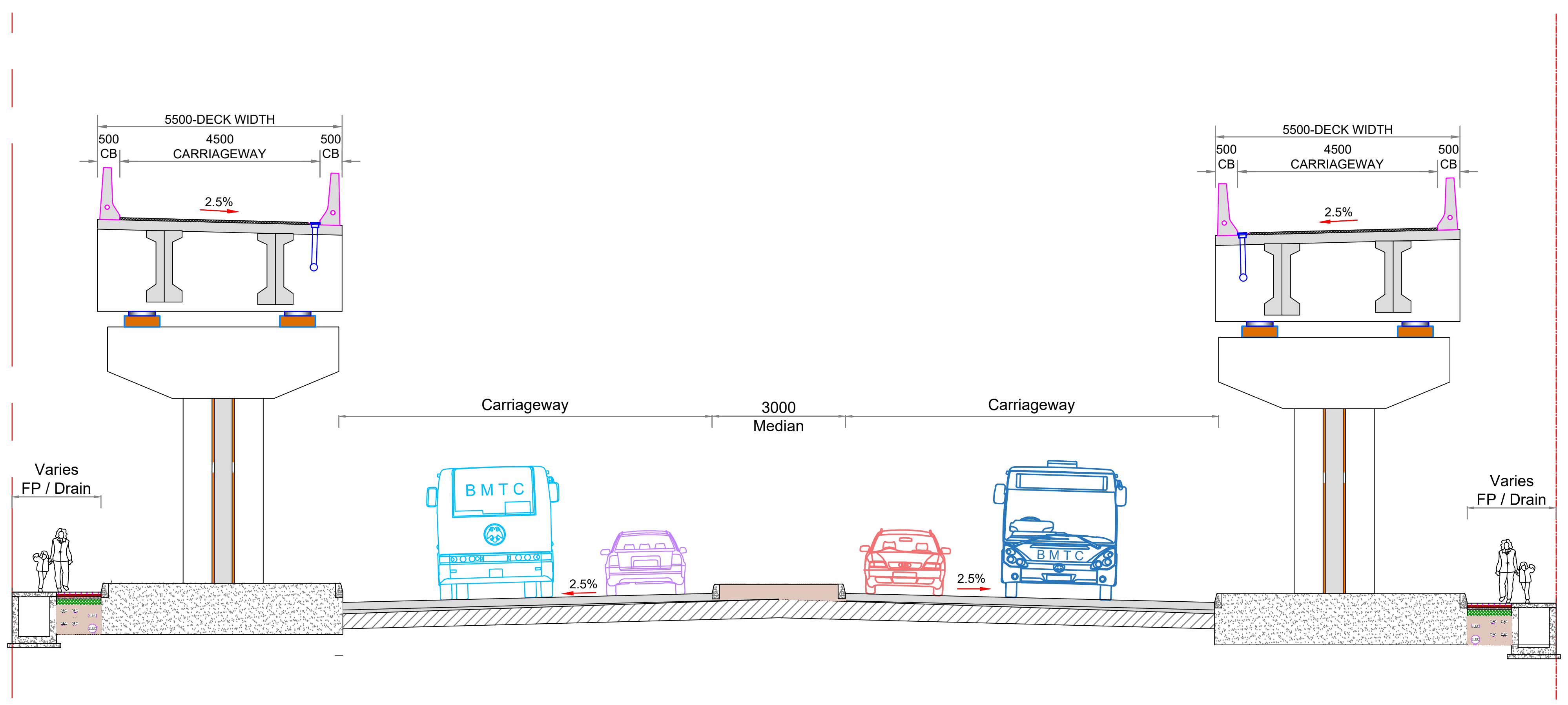

SECTION:6-6

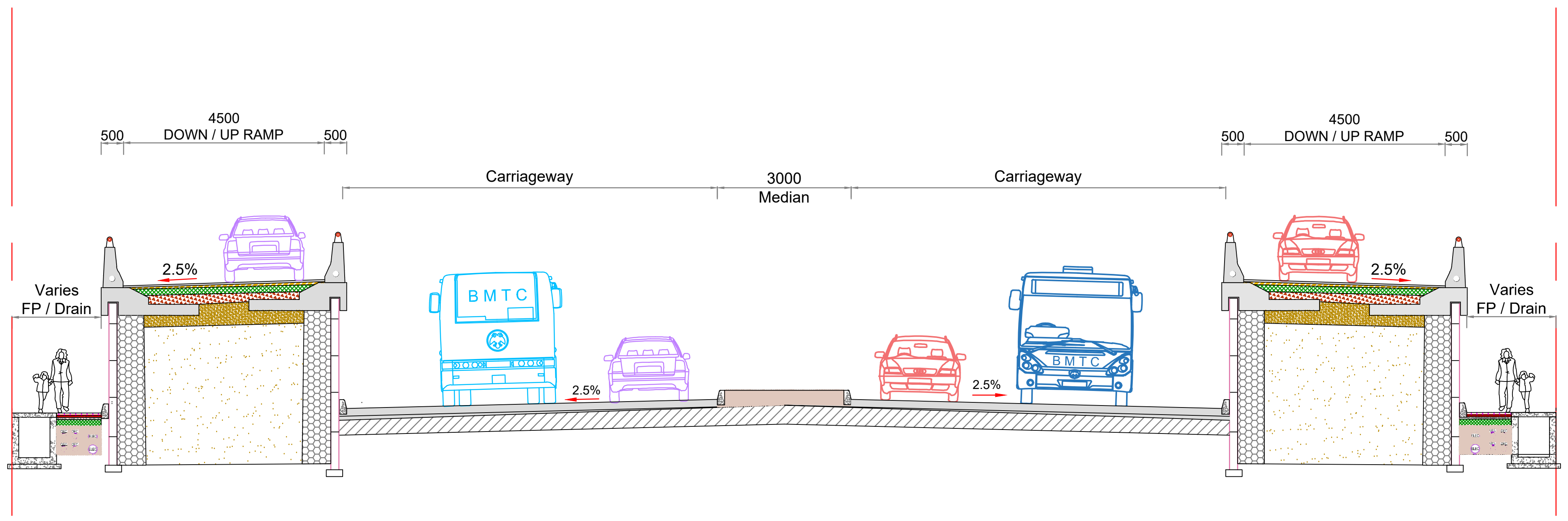

SECTION:7-7

SI NO.	DESCRIPTION	REVISION.	BY	DATE

RELEASED FOR
- ☐ Draft Detailed Project Report
- ☒ Detailed Project Report
- ☐ TENDER

CLIENT :
Bengaluru Smart Infrastructure Limited
Office of the Project Engineer-1, B-Smile,
Room No.108, 1st Floor, Annexe-2 Building,
N.R.Square, BBMP Bengaluru-560002

CONSULTANT:
Infra Support
Your Complete Engineering Partner
INFRA SUPPORT ENGINEERING CONSULTANTS PVT. LTD
An ISO 9001-2015 Certified Company
Infra House, #456/11/1, Hennur Bande,
Hennur Bagalur Main Road, Kalyan Nagar,
Bangalore - 560 043.
Phone: +91 91 48192837
Email: info@infrasupport.in www.infrasupport.in

DRAWN	SK	PROJECT:	Detailed Project Report (DPR) for Construction of Elevated Corridors of Package 1	
DESIGNED	NNK	NAME OF WORK	Construction of 4-Lane Flyover on Bellary Road from UAS Staff Quarters to Mekhri Circle, Bengaluru	JOB NO. 2501
CHECKED	TRL			
DATE	Dec - 2025	TITLE :	GENERAL ARRANGEMENT DRAWING	REVISION
SHEET	07 of 07	SCALE: As shown	DRG. NO. : IS \ 2501 \ HIG \GAD- 06	R0

\\infraserver\designs\#Project\DPR PROJECT\40. Elevated Corridor\Drawings\Tunnel\Plan\GAD MEKHRI.dwg

STRUCTURE DRAWING

STRUCTURE DRAWING

GENERAL ARRANGEMENT DRAWING

MEKHRI CIRCLE

HEBBALA

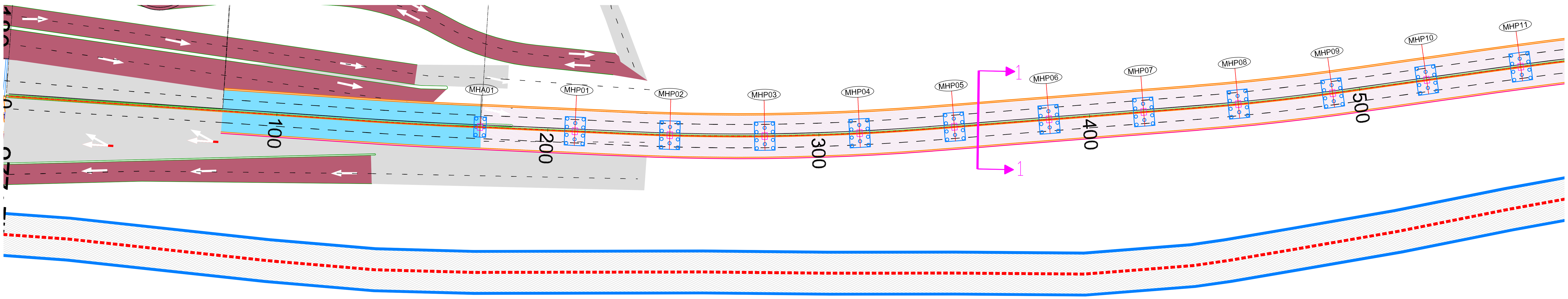

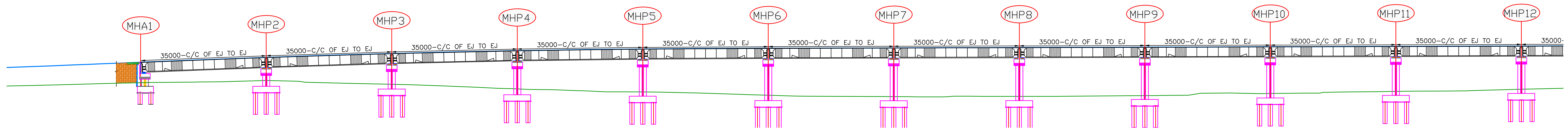

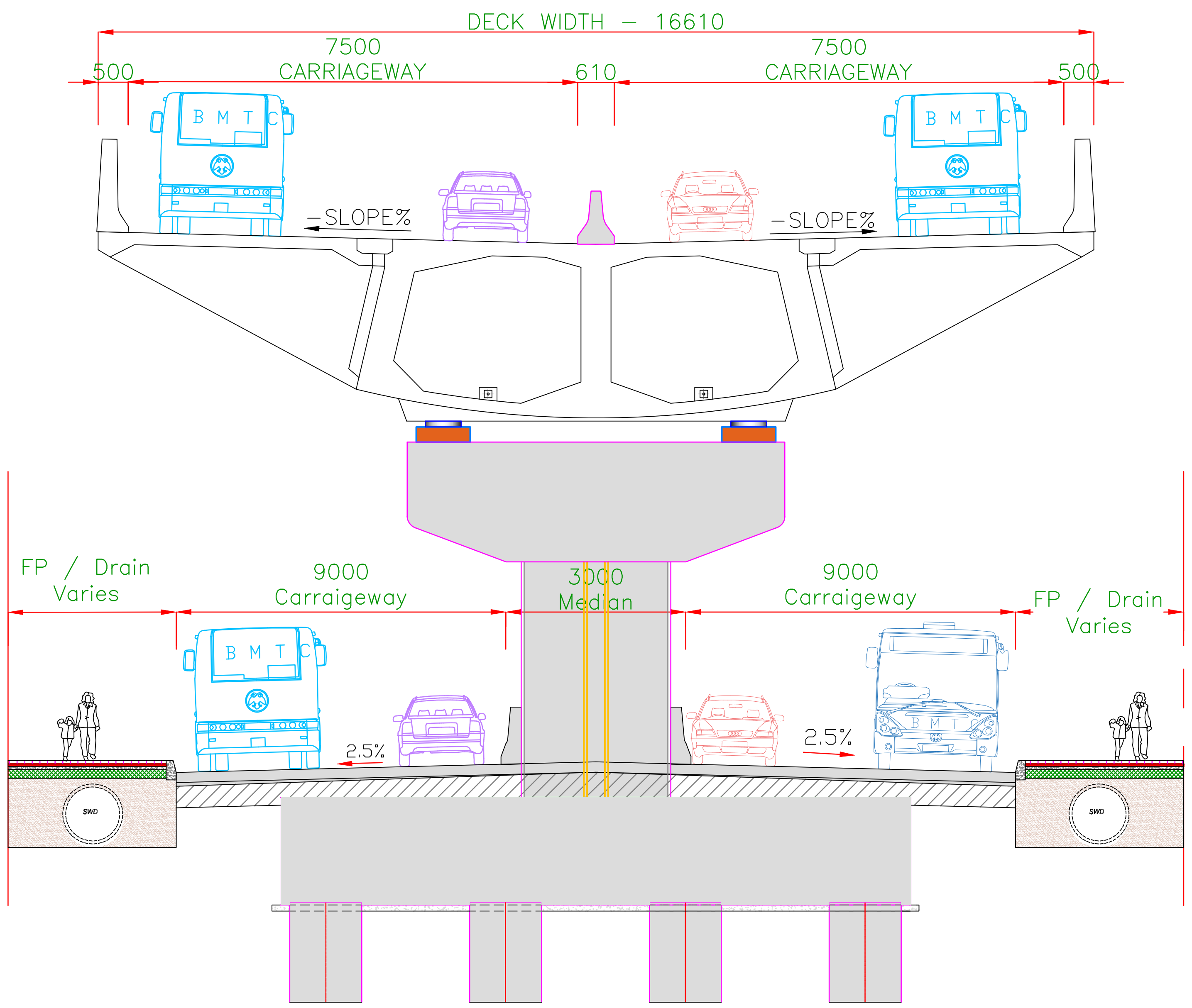

SECTION:1-1

SI NO.	DESCRIPTION	REVISION.	BY	DATE

RELEASED FOR
- ☐ Draft Detailed Project Report
- ☒ Detailed Project Report
- ☐ TENDER

CLIENT :

Bengaluru Smart Infrastructure Limited
Office of the Project Engineer-1, B-Smile,
Room No.108, 1st Floor, Annexe-2 Building,
N.R.Square, BBMP Bengaluru-560002

CONSULTANT:
InfraSupport
Your Complete Engineering Partner
INFRA SUPPORT ENGINEERING CONSULTANTS PVT. LTD
An ISO 9001-2015 Certified Company
Infra House, #456/11/1, Hennur Bande,
Hennur Bagalur Main Road, Kalyan Nagar,
Bangalore - 560 043.
Phone: +91 91 48192837
Email: info@infrasupport.in www.infrasupport.in

DRAWN	CDS	PROJECT:	Detailed Project Report (DPR) for Construction of Elevated Corridors of Package 1	
DESIGNED	RV	NAME OF WORK	Preparation of DPR for Construction of Elevated Corridor Mekhri Circle to Veterinary College Hebbal	JOB NO. 2501
CHECKED	TRL			
DATE	Jan - 2026	TITLE :	GENERAL ARRANGEMENT DRAWING FROM CH-0+000 TO 0+500	REVISION
SHEET	02 of 04	SCALE:	As shown — DRG. NO. : IS \ 2501 \ STR \GAD-02	R0

\\192.168.2.207\structures\2.0 STRUCTURAL DRAWINGS\DPR PROJECTS\2.BBMP ELEVATED CORRIDOR\Package-1\MEKRI CIRCLE TO HEBBAL\Title Sheet MH.dwg

MEKHRI CIRCLE

HEBBALA

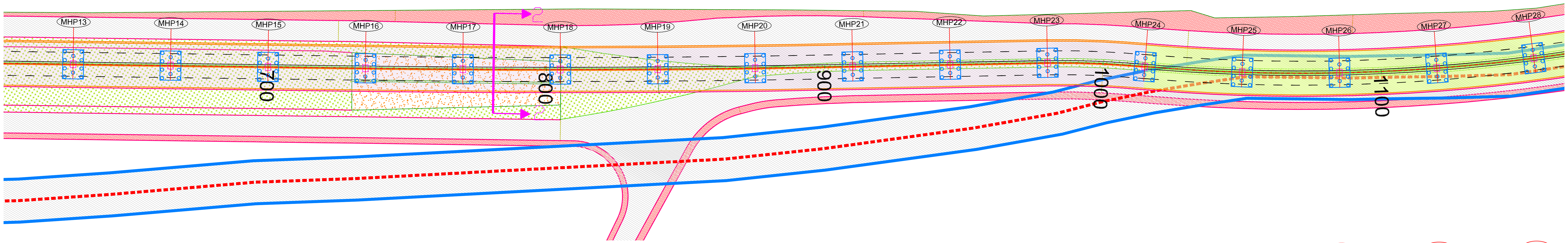

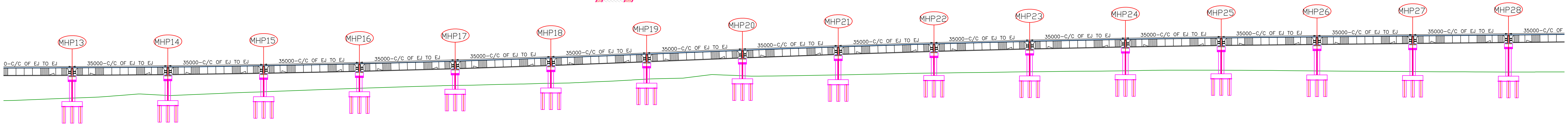

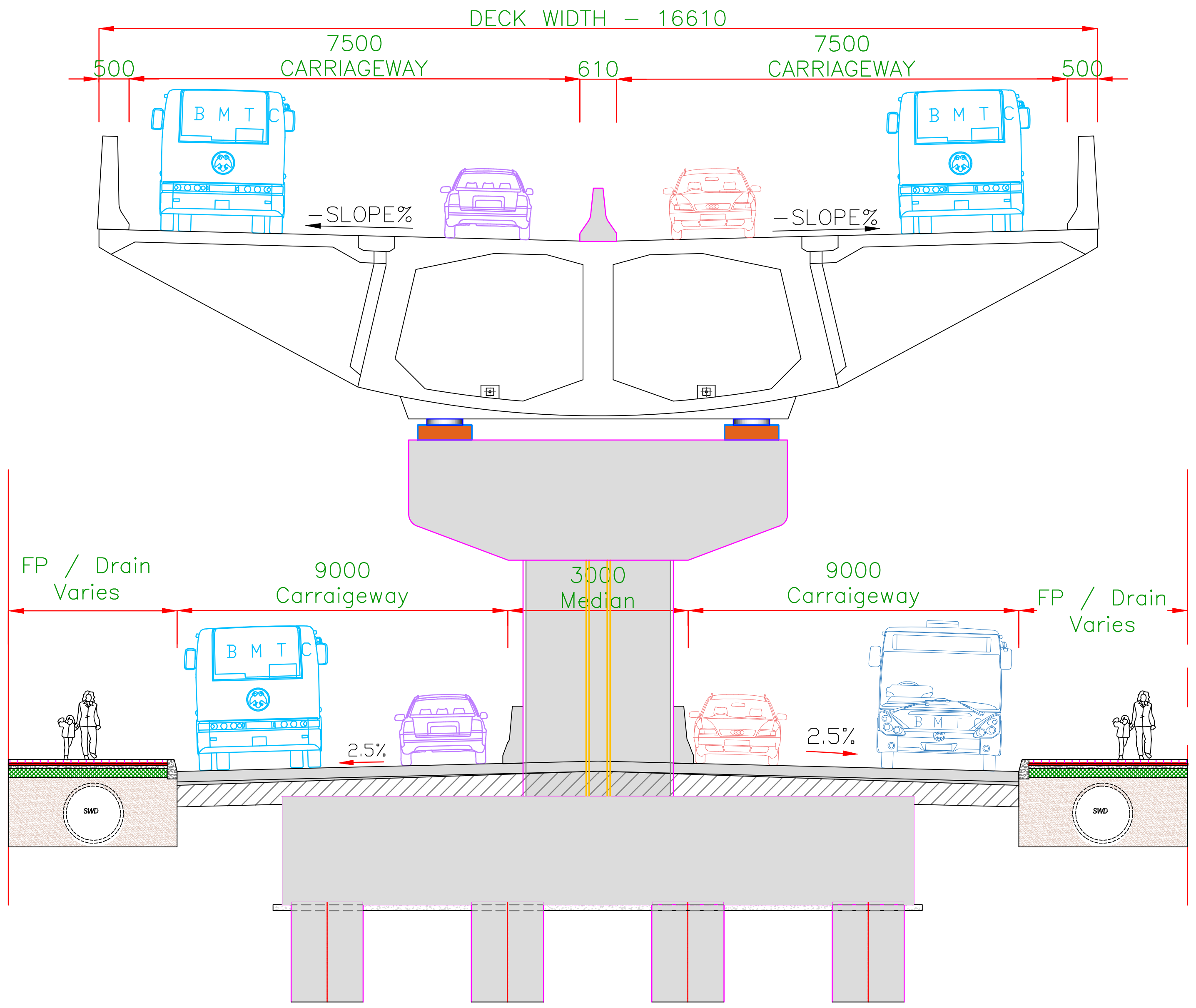

SECTION:2-2

SI NO.	DESCRIPTION	REVISION.	BY	DATE

RELEASED FOR

☐ Draft Detailed Project Report

☒ Detailed Project Report

☐ TENDER

CLIENT :

Bengaluru Smart Infrastructure Limited
Office of the Project Engineer-1, B-Smile,
Room No.108, 1st Floor, Annexe-2 Building,
N.R.Square, BBMP Bengaluru-560002

CONSULTANT:

Infra Support
Your Complete Engineering Partner

INFRA SUPPORT ENGINEERING CONSULTANTS PVT. LTD
An ISO 9001-2015 Certified Company
Infra House, #456/11/1, Hennur Bande,
Hennur Bagalur Main Road, Kalyan Nagar,
Bangalore - 560 043.
Phone: +91 91 48192837
Email: info@infrasupport.in www.infrasupport.in

DRAWN	CDS	PROJECT:	Detailed Project Report (DPR) for Construction of Elevated Corridors of Package 1	
DESIGNED	RV	NAME OF WORK	Preparation of DPR for Construction of Elevated Corridor Mekhri Circle to Veterinary College Hebbal	JOB NO.
CHECKED	TRL			2501
DATE	Jan - 2026	TITLE :	GENERAL ARRANGEMENT DRAWING FROM CH-0+500 TO 1+000	REVISION
SHEET	03 of 04	SCALE: As shown	DRG. NO. : IS \ 2501 \ STR \GAD-03	R0

\\192.168.2.207\structures\2.0 STRUCTURAL DRAWINGS\DPR PROJECTS\2.BBMP ELEVATED CORRIDOR\Package-1\MEKHRI CIRCLE TO HEBBAL\Title Sheet MH.dwg

MEKHRI CIRCLE

HEBBALA

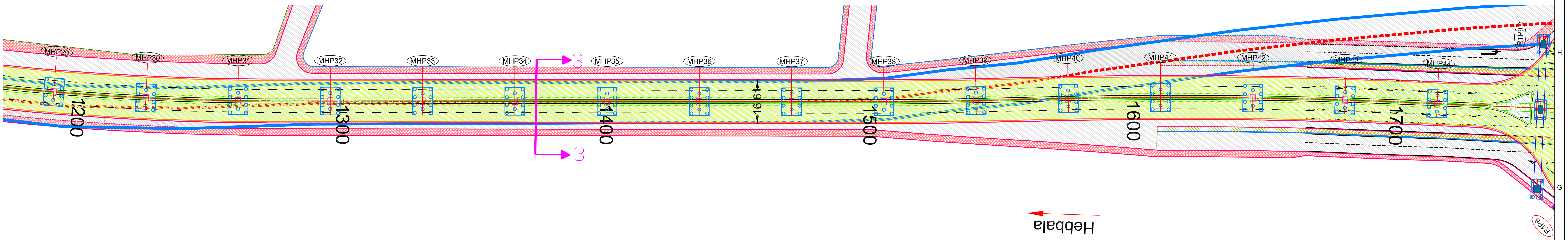

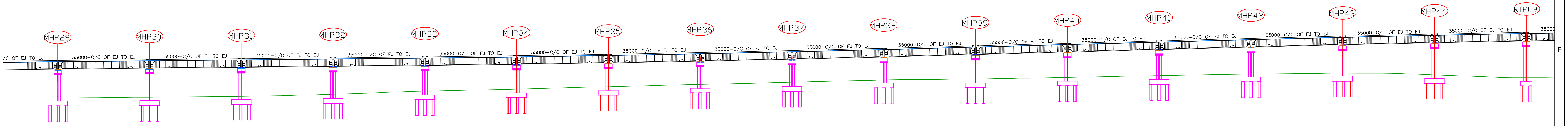

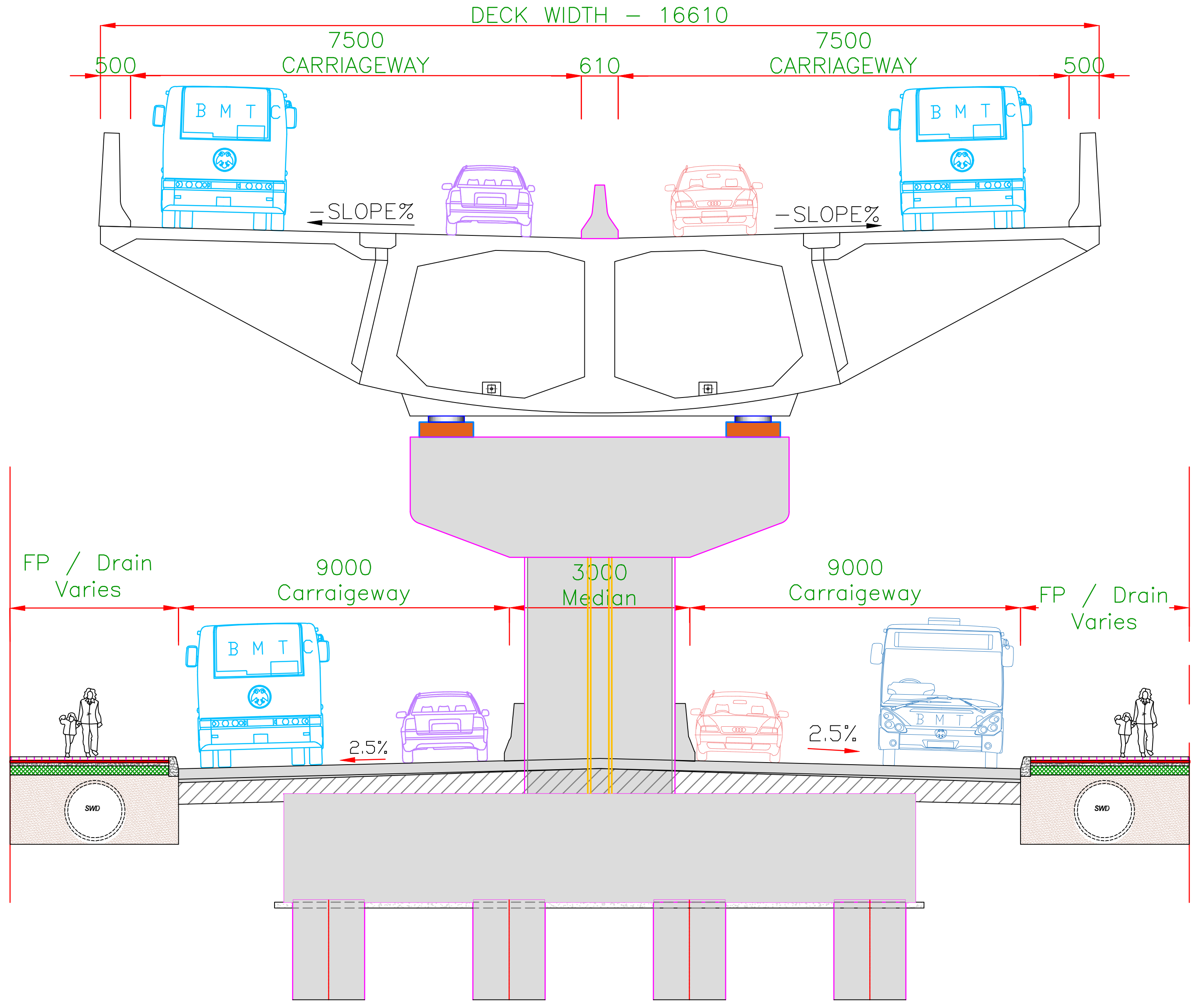

SECTION:3-3

SI NO.	DESCRIPTION	REVISION.	BY	DATE

RELEASED FOR
- ☐ Draft Detailed Project Report
- ☒ Detailed Project Report
- ☐ TENDER

CLIENT :

Bengaluru Smart Infrastructure Limited
Office of the Project Engineer-1, B-Smile,
Room No.108, 1st Floor, Annexe-2 Building,
N.R.Square, BBMP Bengaluru-560002

CONSULTANT:

Infra Support
Your Complete Engineering Partner

INFRA SUPPORT ENGINEERING CONSULTANTS PVT. LTD
An ISO 9001-2015 Certified Company
Infra House, #456/11/1, Hennur Bande,
Hennur Bagalur Main Road, Kalyan Nagar,
Bangalore - 560 043.
Phone: +91 91 48192837
Email: info@infrasupport.in www.infrasupport.in

DRAWN	CDS	PROJECT:	Detailed Project Report (DPR) for Construction of Elevated Corridors of Package 1	
DESIGNED	RV	NAME OF WORK	Preparation of DPR for Construction of Elevated Corridor Mekhri Circle to Veterinary College Hebbal	JOB NO.
CHECKED	TRL			2501
DATE	Jan - 2026	TITLE :	GENERAL ARRANGEMENT DRAWING FROM CH-1+000 TO 1+650	REVISION
SHEET	04 of 04	SCALE: As shown	DRG. NO. : IS \ 2501 \ STR \GAD-04	R0

\\192.168.2.207\structures\2.0 STRUCTURAL DRAWINGS\DPR PROJECTS\2.BBMP ELEVATED CORRIDOR\Package-1\MEKRI CIRCLE TO HEBBAL\Title Sheet MH.dwg

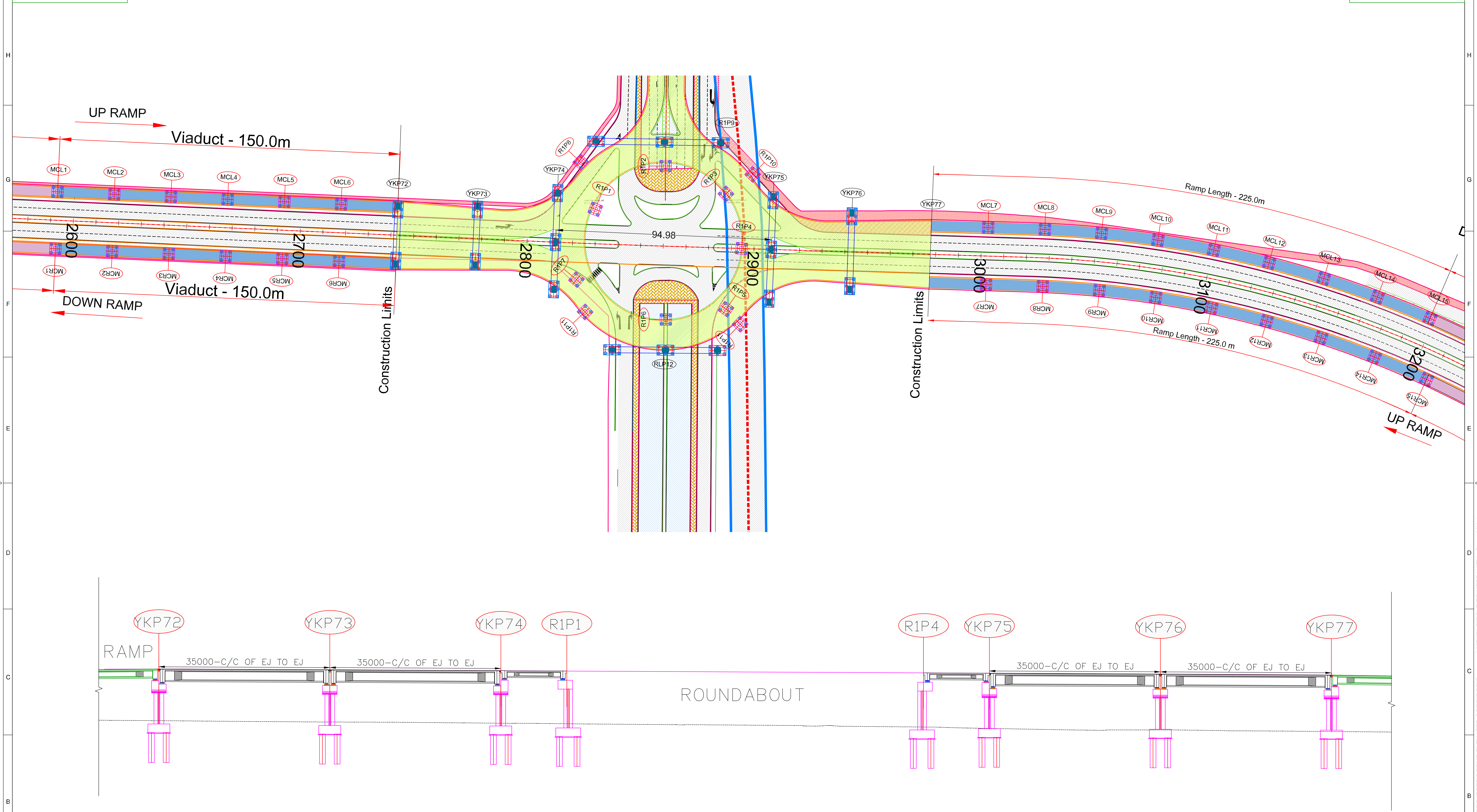

SI NO.	DESCRIPTION	REVISION.	BY	DATE

RELEASED FOR
- [ ] Draft Detailed Project Report
- [x] Detailed Project Report
- [ ] TENDER

CLIENT :

Bengaluru Smart Infrastructure Limited
Office of the Project Engineer-1, B-Smile,
Room No.108, 1st Floor, Annexe-2 Building,
N.R.Square, BBMP Bengaluru-560002

CONSULTANT:

Infra Support
Your Complete Engineering Partner

INFRA SUPPORT ENGINEERING CONSULTANTS PVT. LTD
An ISO 9001-2015 Certified Company
Infra House, #456/11/1, Hennur Bande,
Hennur Bagalur Main Road, Kalyan Nagar,
Bangalore - 560 043.
Phone: +91 91 48192837
Email: info@infrasupport.in www.infrasupport.in

DRAWN	CDS	PROJECT:	Detailed Project Report (DPR) for Construction of Elevated Corridors of Package 1	
DESIGNED	RV	NAME OF WORK	Preparation of DPR for Construction of Elevated Corridor Mekhri Circle to Veterinary College Hebbal	JOB NO.
CHECKED	TRL			2501
DATE	Jan - 2026	TITLE :	GENERAL ARRANGEMENT DRAWING AT MEKHRI CIRCLE	REVISION
SHEET	01 of 04	SCALE: As shown	DRG. NO. : IS \ 2501 \ STR \GAD-01	R0

\\192.168.2.207\structures\2.0 STRUCTURAL DRAWINGS\DPR PROJECTS\2.BBMP ELEVATED CORRIDOR\Package-1\MEKRI CIRCLE TO HEBBAL\Title Sheet MH.dwg

SUPER STRUCTURE

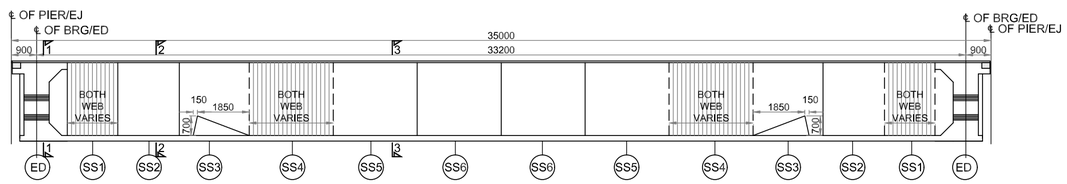

ELEVATION FOR SPINE SEGMENT ARRANGEMENT

(SCALE−1:100)

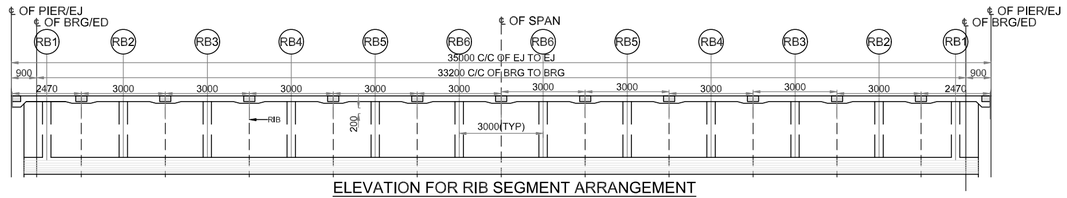

ELEVATION FOR RIB SEGMENT ARRANGEMENT

(SCALE−1:100)

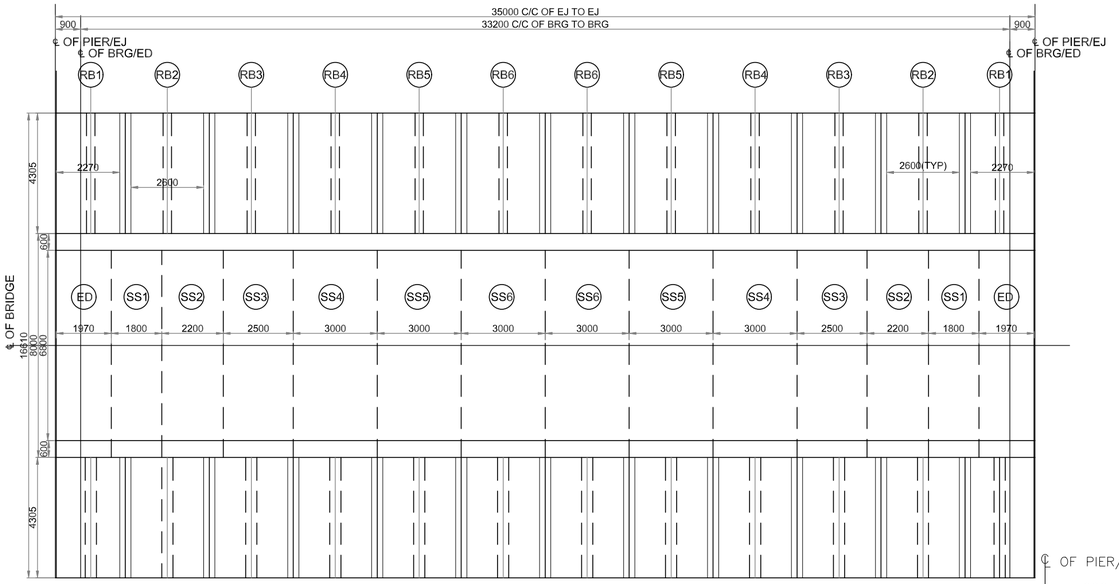

PLAN AT TOP LEVEL

(SCALE−1:100)

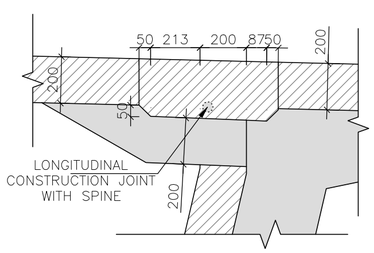

DETAIL- A

(SCALE−1:100)

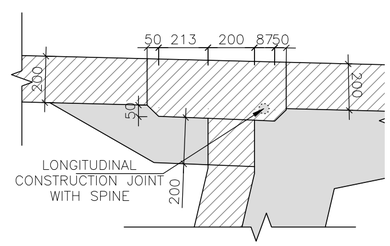

DETAIL- B

(SCALE−1:100)

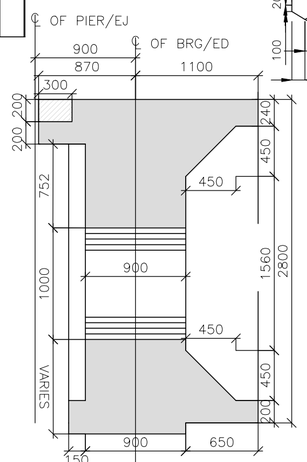

SECTION A-A

(SCALE−1:100)

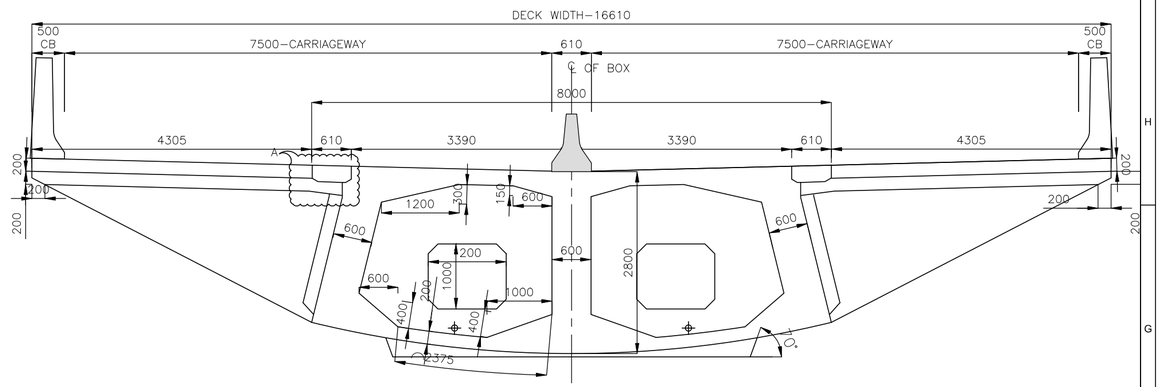

SECTION 1-1

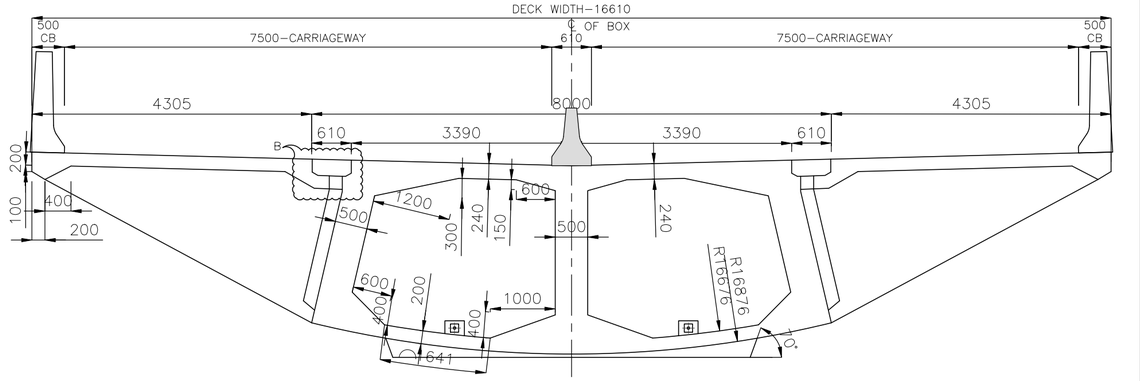

SECTION 2-2

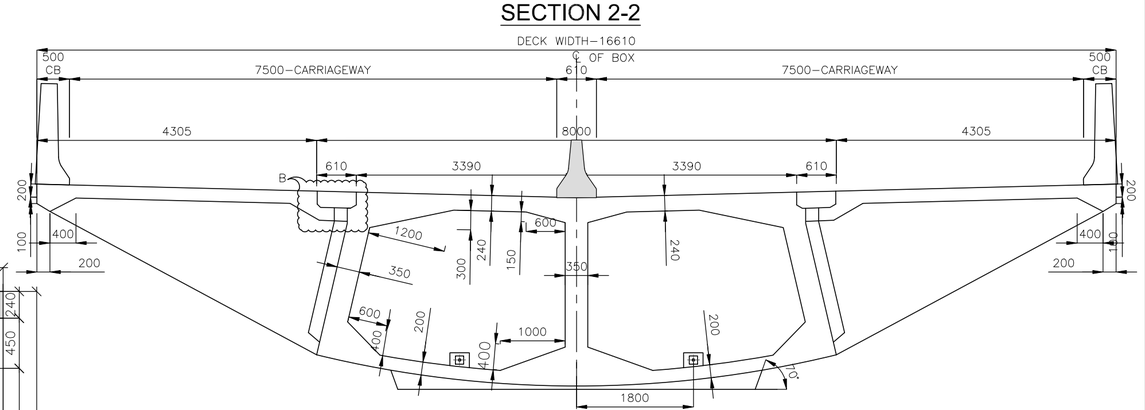

SECTION 3-3

SI NO.	DESCRIPTION	REVISION.	BY	DATE

RELEASED FOR

- ☐ Draft Detailed Project Report
- ▨ Detailed Project Report
- ☐ TENDER

CLIENT :

Bengaluru Smart Infrastructure Limited
Office of the Project Engineer-1, B-Smile,
Room No.108, 1st Floor, Annexe-2 Building,
N.R.Square, BBMP Bengaluru-560002

CONSULTANT:

Infra Support
Your Complete Engineering Partner

INFRA SUPPORT ENGINEERING CONSULTANTS PVT. LTD
An ISO 9001-2015 Certified Company
Infra House, #456/11/1, Hennur Bande,
Hennur Bagalur Main Road, Kalyan Nagar,
Bangalore - 560 043.
Phone: +91 91 48192837
Email: info@infrasupport.in www.infrasupport.in

DRAWN	CDS	PROJECT:	Detailed Project Report (DPR) for Construction of Elevated Corridors of Package 1		
DESIGNED	RV	NAME OF WORK	Preparation of DPR for Construction of Elevated Corridor Mekhri Circle to Veterinary College Hebbal	JOB NO.	2501
CHECKED	TRL				
DATE	Jan - 2026	TITLE :	DIMENSION DETAILS OF SUPERSTRUCTURE OF SPINE AND WING OF DECK WIDTH 16.61m	REVISION	R0
SHEET	01 OF 01	SCALE:	As shown	DRG. NO. : IS \ 2501 \ STR \GAD-01	

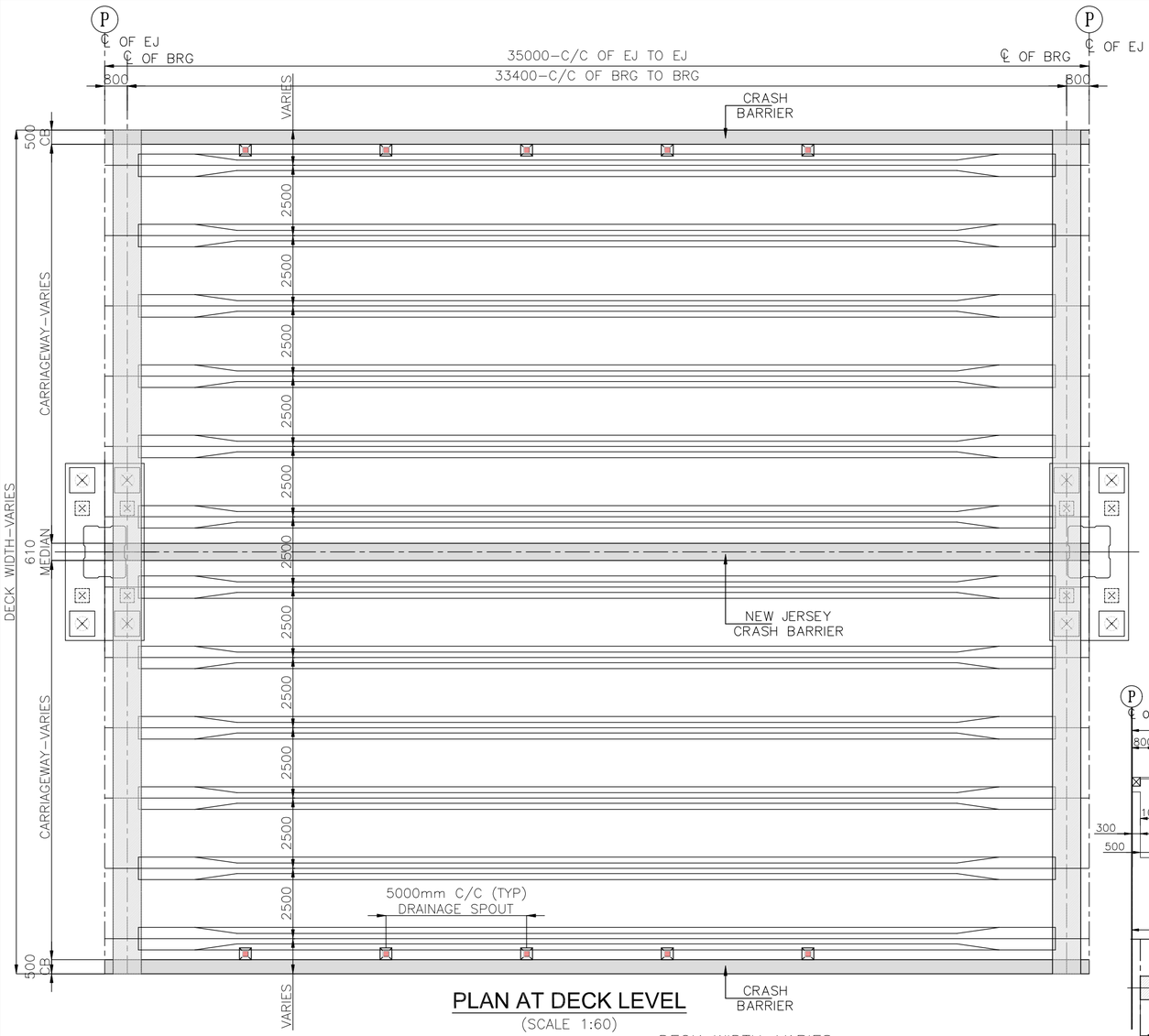

PLAN AT DECK LEVEL
(SCALE 1:60)

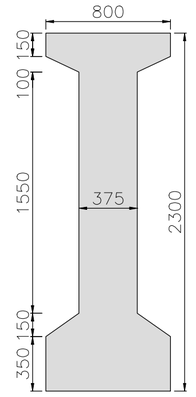

CROSS SECTION @ MID
(PRE CAST PSC 'I' GIRDER)
(SCALE 1:25)

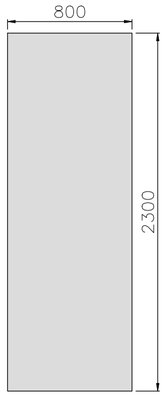

CROSS SECTION @ END
(PRE CAST PSC 'I' GIRDER)
(SCALE 1:25)

NOTES:

1. ALL DIMENSIONS ARE IN MILLIMETERS AND LEVELS ARE IN METER, UNLESS OTHERWISE SPECIFIED.
2. DIMENSIONS ARE NOT TO BE SCALED. ONLY WRITTEN DIMENSIONS SHALL BE FOLLOWED.
3. THIS DRAWING SHOULD BE READ IN CONJUNCTION WITH GENERAL ARRANGEMENT DRAWINGS.
4. SEISMIC ZONE: II
5. CONDITION OF EXPOSURE – 'MODERATE'.
6. POT CUM PTFE BEARING SHALL CONFIRM TO IRC 83–PART III
7. THE CROSS CAMBER OF 2.5% IS PROPOSED IN THE DECK SYSTEM.
8. ALL DESIGN MIX CONCRETE SHALL CONFORM TO TABLE 6.4 AND Cl.18.5.4 OF IRC: 112–2020.
9. CONTRACTOR SHALL BE REVERIFY THE LEVELS INDICATED IN THE DRAWING IN CASE OF ANY CHANGES IN LEVELS ,SAME SHALL BE COMMUNICATED WITH WITH CONSULTANT BEFORE EXECUTION .
10. IF ANY AMBIGUITY IS FOUND IN DRAWINGS OR AT SITE, THE SAME SHALL BE BROUGHT TO DESIGNER'S/ ENGINEER'S NOTICE BEFORE EXECUTION.
11. REINFORCEMENT STEEL SHALL BE HYSD BARS OF GRADE Fe500/Fe550 CONFORMING TOIS:1786–2008
12. GRADE OF CONCRETE SHALL BE AS FOLLOWS:
    - LEVELING COURSE : PCC M15
    - DECK SLAB : M55
    - PRE CAST PSC 'I' GIRDER: M55
    - CRASH BARRIER : M40
    - PEDESTAL : M40
13. CLEAR COVER TO ALL REINFORCEMENT SHALL BE:
    - DECK SLAB : 40mm
    - PSC'I' GIRDER : 40mm
14. THE NOMINAL MAXIMUM SIZE OF AGGREGATE TO BE USED SHALL BE 20mm.
15. THE DESIGNS HAVE BEEN DONE FOR 70R, WHEELED & CLASS A LIVE LOADS ACCORDING TO IRC:6 THE GOVERNING CASES FOR DESIGN HAVE BEEN TAKEN INTO CONSIDERATION.

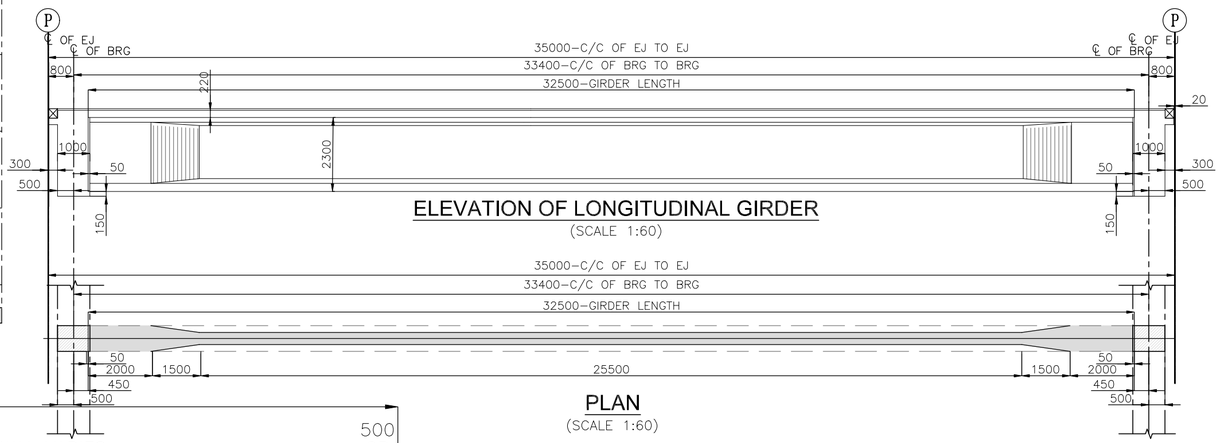

ELEVATION OF LONGITUDINAL GIRDER
(SCALE 1:60)

PLAN
(SCALE 1:60)

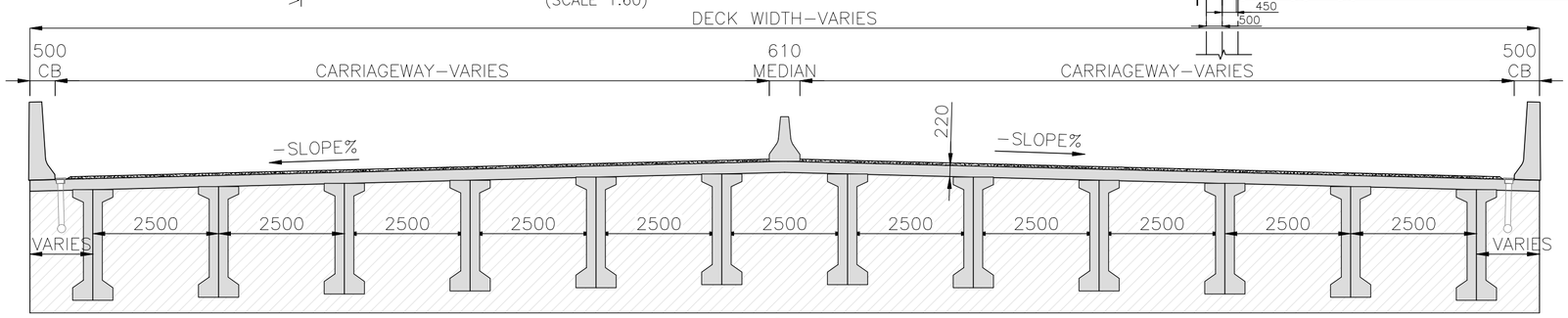

SECTION
(SCALE 1:60)

SI NO.	DESCRIPTION	REVISION.	BY	DATE

RELEASED FOR
- ☐ Draft Detailed Project Report
- ▨ Detailed Project Report
- ☐ TENDER

CLIENT :

Bengaluru Smart Infrastructure Limited
Office of the Project Engineer-1, B-Smile,
Room No.108, 1st Floor, Annexe-2 Building,
N.R.Square, BBMP Bengaluru-560002

CONSULTANT:

Infra Support
Your Complete Engineering Partner

INFRA SUPPORT ENGINEERING CONSULTANTS PVT. LTD
An ISO 9001-2015 Certified Company
Infra House, #456/11/1, Hennur Bande,
Hennur Bagalur Main Road, Kalyan Nagar,
Bangalore - 560 043.
Phone: +91 91 48192837
Email: info@infrasupport.in www.infrasupport.in

DRAWN	CDS	PROJECT:	Detailed Project Report (DPR) for Construction of Elevated Corridors of Package 1
DESIGNED	RV	NAME OF WORK	Preparation of DPR for Construction of Elevated Corridor Mekhri Circle to Veterinary College Hebbal
CHECKED	TRL		
DATE	Jan - 2026	TITLE :	DIMENSION DETAILS OF SUPER STRUCTURE -PSC 'I' GIDER OF 35m SPAN
SHEET	01 of 01	SCALE:	As shown

JOB NO. 2501

REVISION R0

DRG. NO. : IS \ 2501 \ STR \ GAD-01

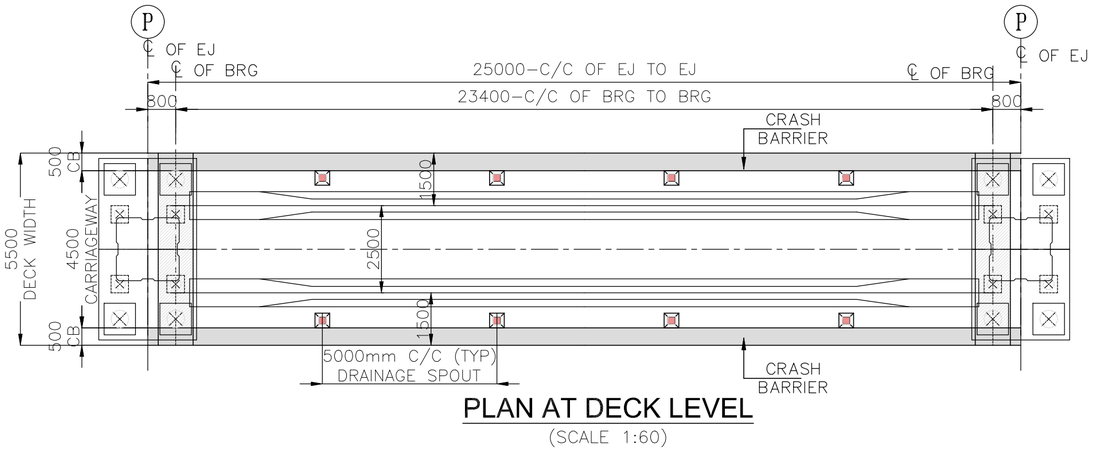

PLAN AT DECK LEVEL

(SCALE 1:60)

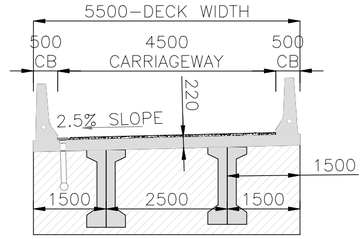

SECTION

(SCALE 1:60)

NOTES:

1. ALL DIMENSIONS ARE IN MILLIMETERS AND LEVELS ARE IN METER, UNLESS OTHERWISE SPECIFIED.
2. DIMENSIONS ARE NOT TO BE SCALED. ONLY WRITTEN DIMENSIONS SHALL BE FOLLOWED.
3. THIS DRAWING SHOULD BE READ IN CONJUNCTION WITH GENERAL ARRANGEMENT DRAWINGS.
4. SEISMIC ZONE: II
5. CONDITION OF EXPOSURE – 'MODERATE'.
6. POT CUM PTFE BEARING SHALL CONFIRM TO IRC 83–PART III
7. THE CROSS CAMBER OF 2.5% IS PROPOSED IN THE DECK SYSTEM.
8. ALL DESIGN MIX CONCRETE SHALL CONFORM TO TABLE 6.4 AND Cl.18.5.4 OF IRC: 112–2020.
9. CONTRACTOR SHALL BE REVERIFY THE LEVELS INDICATED IN THE DRAWING IN CASE OF ANY CHANGES IN LEVELS ,SAME SHALL BE COMMUNICATED WITH WITH CONSULTANT BEFORE EXECUTION .
10. IF ANY AMBIGUITY IS FOUND IN DRAWINGS OR AT SITE, THE SAME SHALL BE BROUGHT TO DESIGNER'S/ ENGINEER'S NOTICE BEFORE EXECUTION.
11. REINFORCEMENT STEEL SHALL BE HYSD BARS OF GRADE Fe500/Fe550 CONFORMING TO IS:1786–2008
12. GRADE OF CONCRETE SHALL BE AS FOLLOWS:
    - LEVELING COURSE : PCC M15
    - DECK SLAB : M55
    - PRE CAST PSC 'I' GIRDER: M55
    - CRASH BARRIER : M40
    - PEDESTAL : M40
13. CLEAR COVER TO ALL REINFORCEMENT SHALL BE:
    - DECK SLAB : 40mm
    - PSC'I' GIRDER : 40mm
14. THE NOMINAL MAXIMUM SIZE OF AGGREGATE TO BE USED SHALL BE 20mm.
15. THE DESIGNS HAVE BEEN DONE FOR 70R, WHEELED & CLASS A LIVE LOADS ACCORDING TO IRC:6 THE GOVERNING CASES FOR DESIGN HAVE BEEN TAKEN INTO CONSIDERATION.

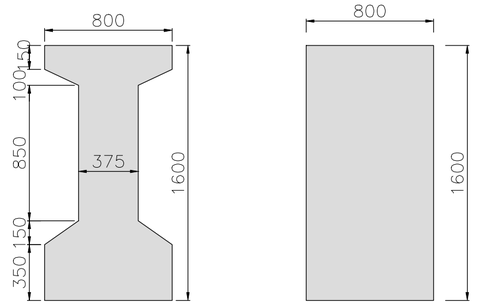

CROSS SECTION @ MID

(PRE CAST PSC 'I' GIRDER)
(SCALE 1:25)

CROSS SECTION @ END

(PRE CAST PSC 'I' GIRDER)
(SCALE 1:25)

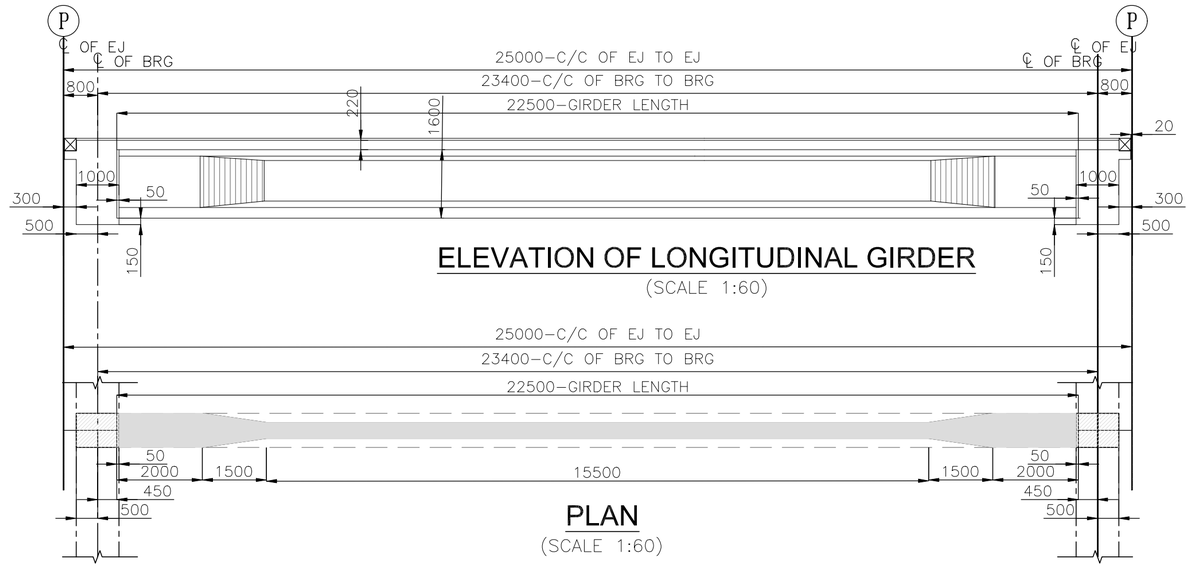

ELEVATION OF LONGITUDINAL GIRDER

(SCALE 1:60)

PLAN

(SCALE 1:60)

SI NO.	DESCRIPTION	REVISION.	BY	DATE

RELEASED FOR
- ☐ Draft Detailed Project Report
- ▨ Detailed Project Report
- ☐ TENDER

CLIENT :
Bengaluru Smart Infrastructure Limited
Office of the Project Engineer-1, B-Smile,
Room No.108, 1st Floor, Annexe-2 Building,
N.R.Square, BBMP Bengaluru-560002

CONSULTANT:
Infra Support
Your Complete Engineering Partner
INFRA SUPPORT ENGINEERING CONSULTANTS PVT. LTD
An ISO 9001-2015 Certified Company
Infra House, #456/11/1, Hennur Bande,
Hennur Bagalur Main Road, Kalyan Nagar,
Bangalore - 560 043.
Phone: +91 91 48192837
Email: info@infrasupport.in www.infrasupport.in

DRAWN	CDS	PROJECT:	Detailed Project Report (DPR) for Construction of Elevated Corridors of Package 1
DESIGNED	RV	NAME OF WORK	Preparation of DPR for Construction of Elevated Corridor Mekhri Circle to Veterinary College Hebbal
CHECKED	TRL		
DATE	Jan - 2026	TITLE :	DIMENSION DETAILS OF SUPER STRUCTURE -PSC 'I' GIDER OF 25m SPAN FOR 5.5m DECK
SHEET	01 of 01	SCALE:	As shown

JOB NO. 2501
REVISION R0
DRG. NO. : IS \ 2501 \ STR \GAD-01

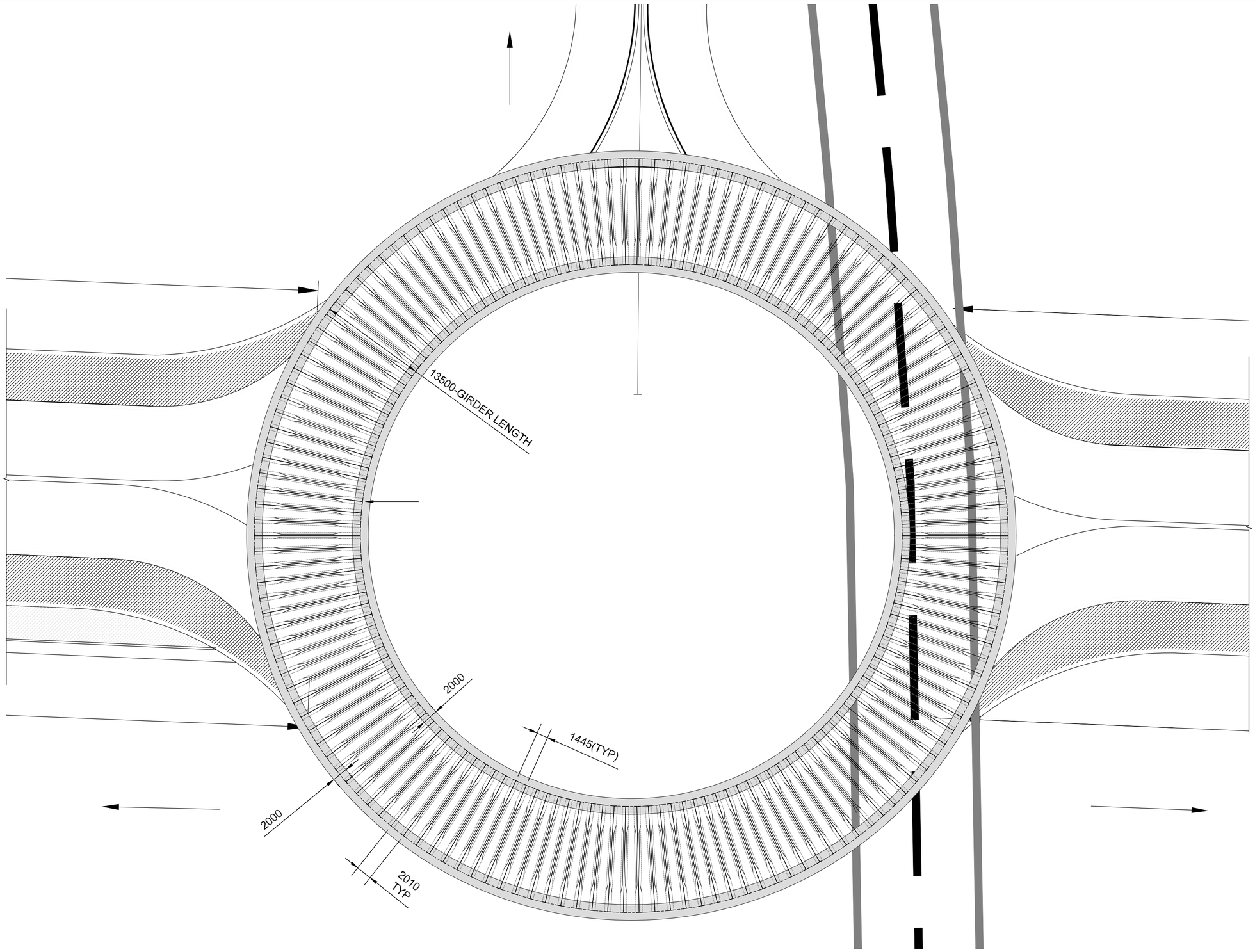

SI NO.	DESCRIPTION	REVISION.	BY	DATE

RELEASED FOR

- ☐ Draft Detailed Project Report
- ▨ Detailed Project Report
- ☐ TENDER

CLIENT :

Bengaluru Smart Infrastructure Limited
Office of the Project Engineer-1, B-Smile,
Room No.108, 1st Floor, Annexe-2 Building,
N.R.Square, BBMP Bengaluru-560002

CONSULTANT:
Infra Support
Your Complete Engineering Partner
INFRA SUPPORT ENGINEERING CONSULTANTS PVT. LTD
An ISO 9001-2015 Certified Company
Infra House, #456/11/1, Hennur Bande,
Hennur Bagalur Main Road, Kalyan Nagar,
Bangalore - 560 043.
Phone: +91 91 48192837
Email: info@infrasupport.in www.infrasupport.in

DRAWN	CDS	PROJECT:	Detailed Project Report (DPR) for Construction of Elevated Corridors of Package 1
DESIGNED	RV	NAME OF WORK	Preparation of DPR for Construction of Elevated Corridor Mekhri Circle to Veterinary College Hebbal
CHECKED	TRL		
DATE	Jan - 2026	TITLE :	GIRDER LAYOUT FOR ROUNDABOUT
SHEET	01 of 01	SCALE:	As shown

JOB NO. 2501

REVISION R0

DRG. NO. : IS \ 2501 \ STR \ GAD-01

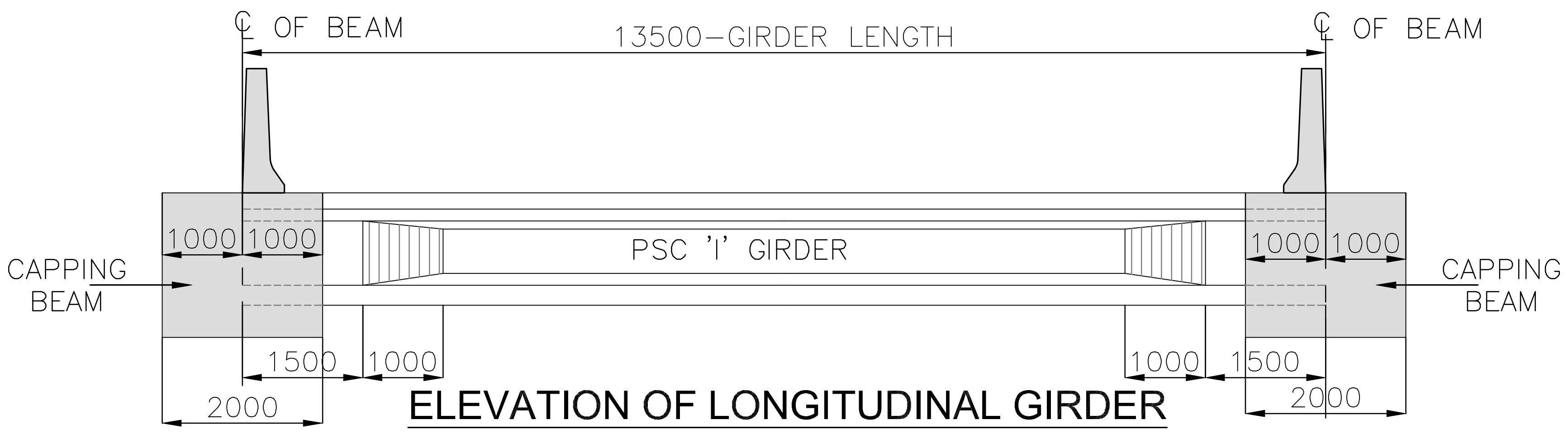

ELEVATION OF LONGITUDINAL GIRDER
(SCALE 1:60)

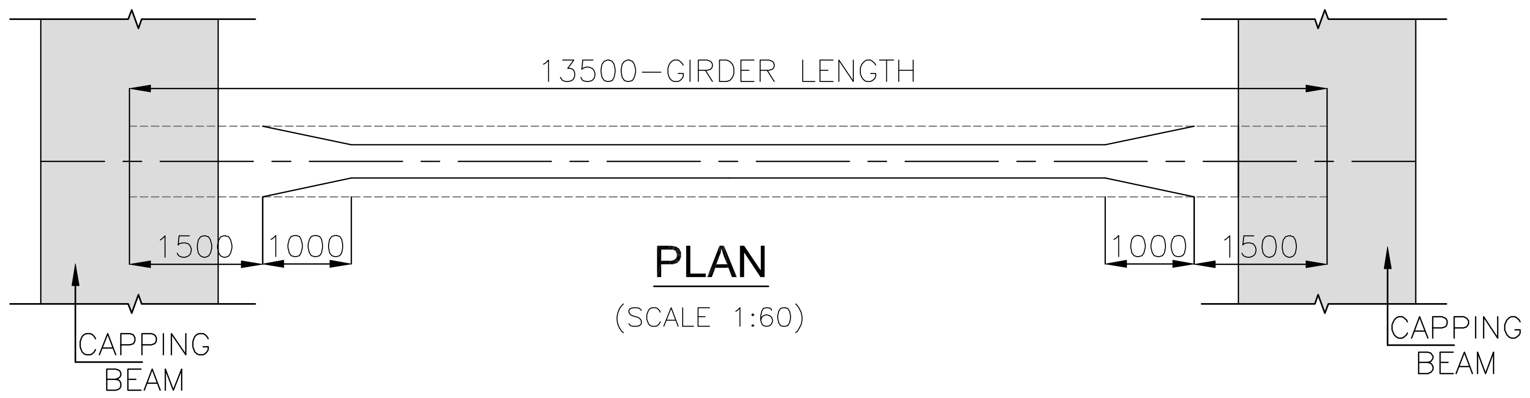

PLAN
(SCALE 1:60)

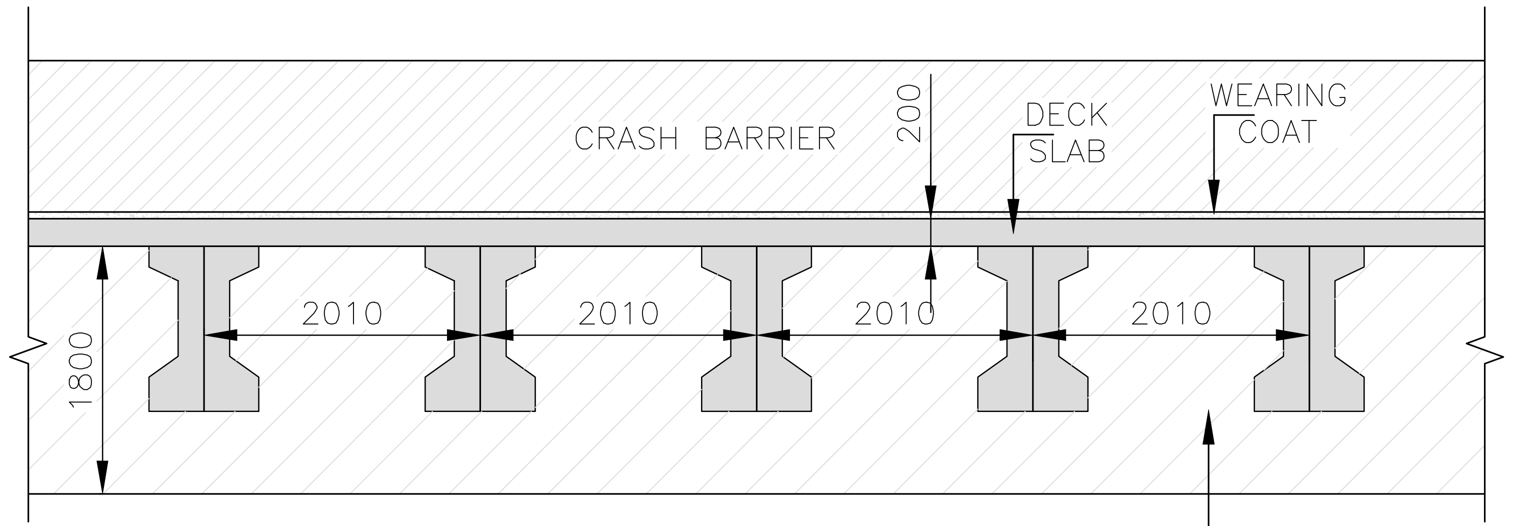

SECTION AT OUTER ROUNDABOUT
(SCALE 1:60)

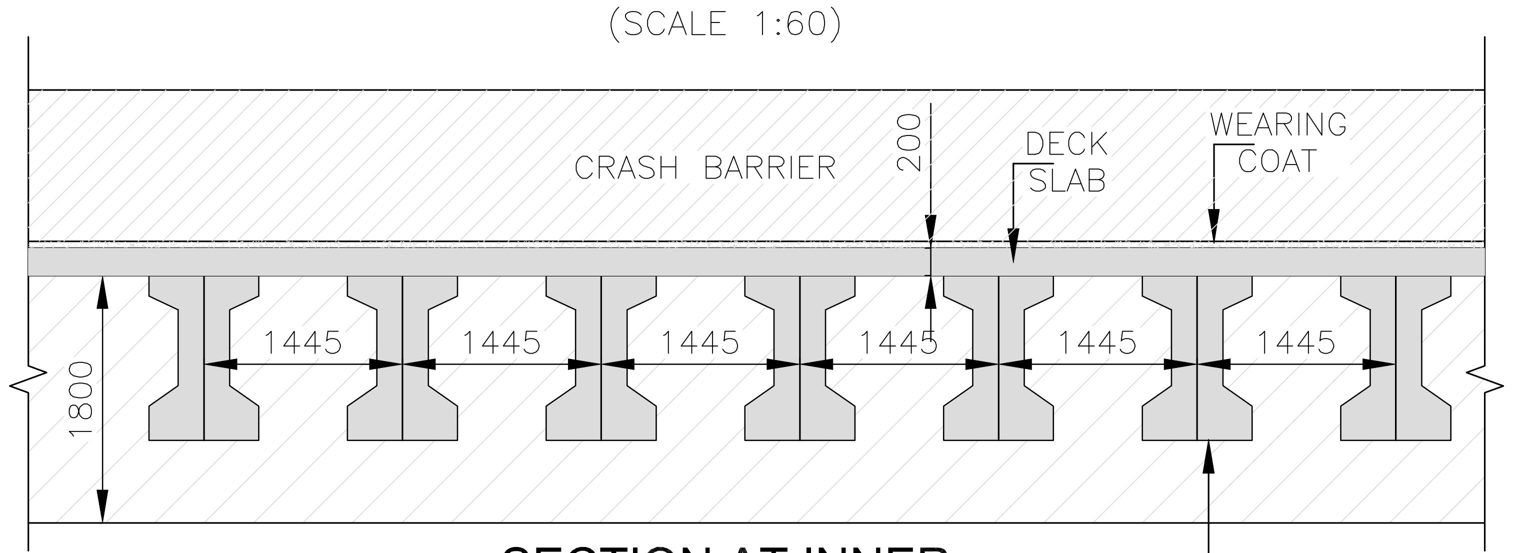

SECTION AT INNER ROUNDABOUT
(SCALE 1:60)

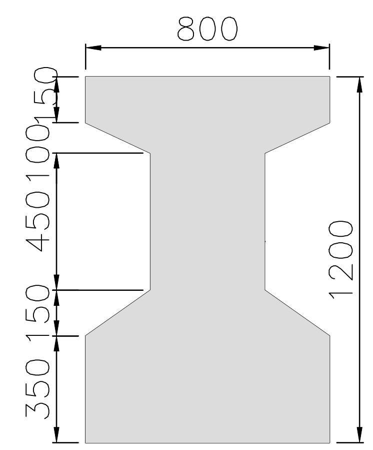

CROSS SECTION @ MID
(PRE CAST PSC 'I' GIRDER)
(SCALE 1:25)

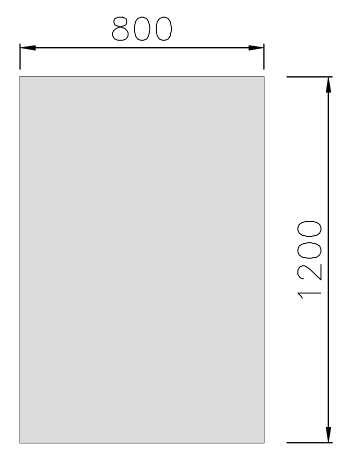

CROSS SECTION @ END
(PRE CAST PSC 'I' GIRDER)
(SCALE 1:25)

NOTES:

1. ALL DIMENSIONS ARE IN MILLIMETERS AND LEVELS ARE IN METER, UNLESS OTHERWISE SPECIFIED.
2. DIMENSIONS ARE NOT TO BE SCALED. ONLY WRITTEN DIMENSIONS SHALL BE FOLLOWED.
3. THIS DRAWING SHOULD BE READ IN CONJUNCTION WITH GENERAL ARRANGEMENT DRAWINGS.
4. SEISMIC ZONE: II
5. CONDITION OF EXPOSURE – 'MODERATE'.
6. POT CUM PTFE BEARING SHALL CONFIRM TO IRC 83–PART III
7. THE CROSS CAMBER OF 2.5% IS PROPOSED IN THE DECK SYSTEM.
8. ALL DESIGN MIX CONCRETE SHALL CONFORM TO TABLE 6.4 AND Cl.18.5.4 OF IRC: 112–2020.
9. CONTRACTOR SHALL BE REVERIFY THE LEVELS INDICATED IN THE DRAWING IN CASE OF ANY CHANGES IN LEVELS ,SAME SHALL BE COMMUNICATED WITH WITH CONSULTANT BEFORE EXECUTION .
10. IF ANY AMBIGUITY IS FOUND IN DRAWINGS OR AT SITE, THE SAME SHALL BE BROUGHT TO DESIGNER'S/ ENGINEER'S NOTICE BEFORE EXECUTION.
11. REINFORCEMENT STEEL SHALL BE HYSD BARS OF GRADE Fe500/Fe550 CONFORMING TO IS:1786–2008
12. GRADE OF CONCRETE SHALL BE AS FOLLOWS:
    - LEVELING COURSE : PCC M15
    - DECK SLAB : M55
    - PRE CAST PSC 'I' GIRDER: M55
    - CRASH BARRIER : M40
    - PEDESTAL : M40
13. CLEAR COVER TO ALL REINFORCEMENT SHALL BE:
    - DECK SLAB : 40mm
    - PSC'I' GIRDER : 40mm
14. THE NOMINAL MAXIMUM SIZE OF AGGREGATE TO BE USED SHALL BE 20mm.
15. THE DESIGNS HAVE BEEN DONE FOR 70R, WHEELED & CLASS A LIVE LOADS ACCORDING TO IRC:6 THE GOVERNING CASES FOR DESIGN HAVE BEEN TAKEN INTO CONSIDERATION.

SI NO.	DESCRIPTION	REVISION.	BY	DATE

RELEASED FOR
- ☐ Draft Detailed Project Report
- ☒ Detailed Project Report
- ☐ TENDER

CLIENT :
Bengaluru Smart Infrastructure Limited
Office of the Project Engineer-1, B-Smile,
Room No.108, 1st Floor, Annexe-2 Building,
N.R.Square, BBMP Bengaluru-560002

CONSULTANT:
Infra Support
Your Complete Engineering Partner
INFRA SUPPORT ENGINEERING CONSULTANTS PVT. LTD
An ISO 9001-2015 Certified Company
Infra House, #456/11/1, Hennur Bande,
Hennur Bagalur Main Road, Kalyan Nagar,
Bangalore - 560 043.
Phone: +91 91 48192837
Email: info@infrasupport.in www.infrasupport.in

DRAWN	CDS	PROJECT:	Detailed Project Report (DPR) for Construction of Elevated Corridors of Package 1	
DESIGNED	RV	NAME OF WORK	Preparation of DPR for Construction of Elevated Corridor Mekhri Circle to Veterinary College Hebbal	JOB NO.
CHECKED	TRL			2501
DATE	Jan - 2026	TITLE :	DIMENSION DETAILS OF SUPER STRUCTURE -PSC 'I' GIRDER AT ROUNDABOUT	REVISION
SHEET	01 of 01	SCALE: As shown	DRG. NO. : IS \ 2501 \ STR \GAD-01	R0

\\192.168.2.207\structures\2.0 STRUCTURAL DRAWINGS\DPR PROJECTS\2.BBMP ELEVATED CORRIDOR\Package-1\MEKRI CIRCLE TO HEBBAL\Title Sheet MH.dwg

SUB STRUCTURE

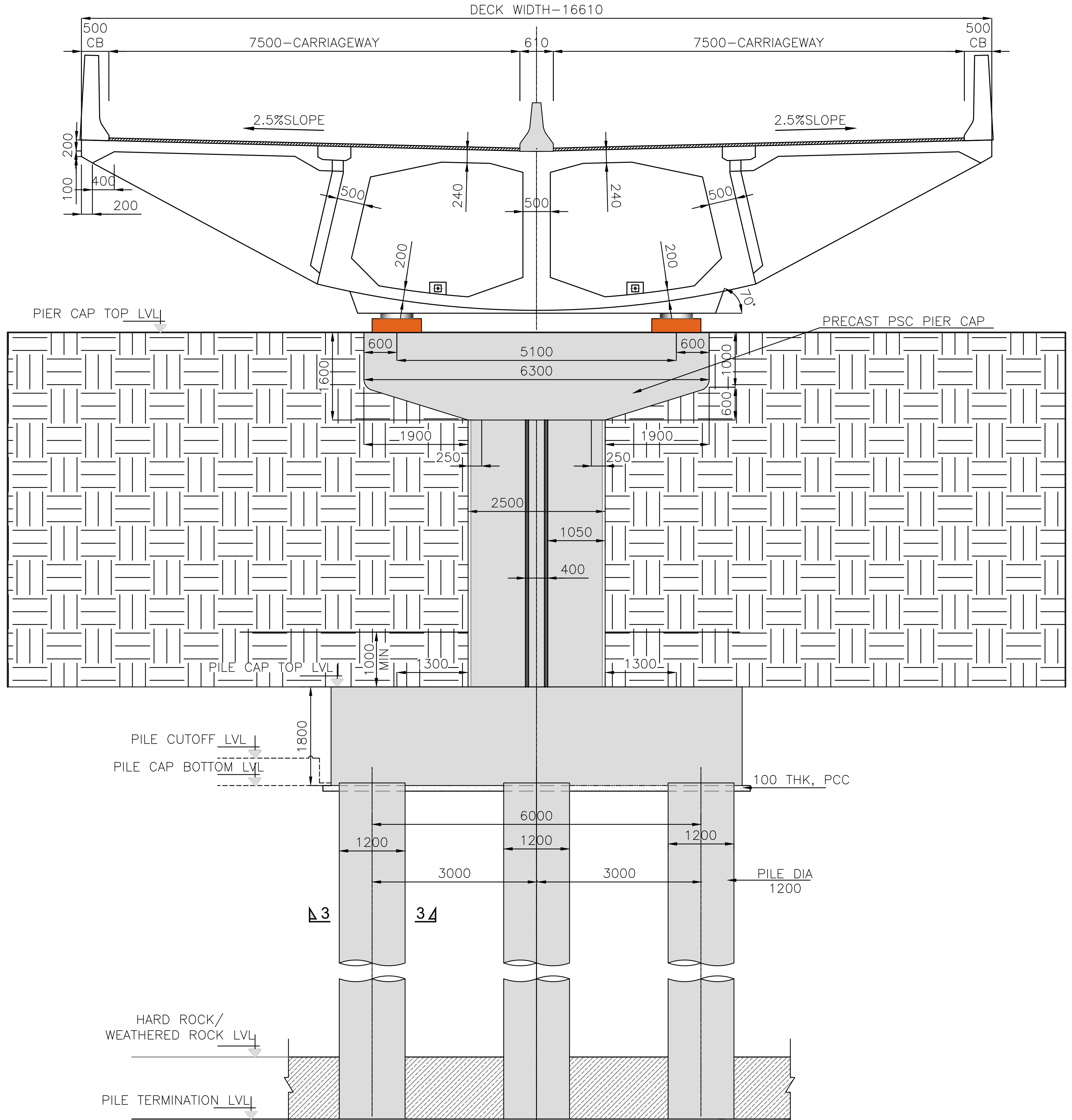

SECTION 1-1

(SCALE 1:80)

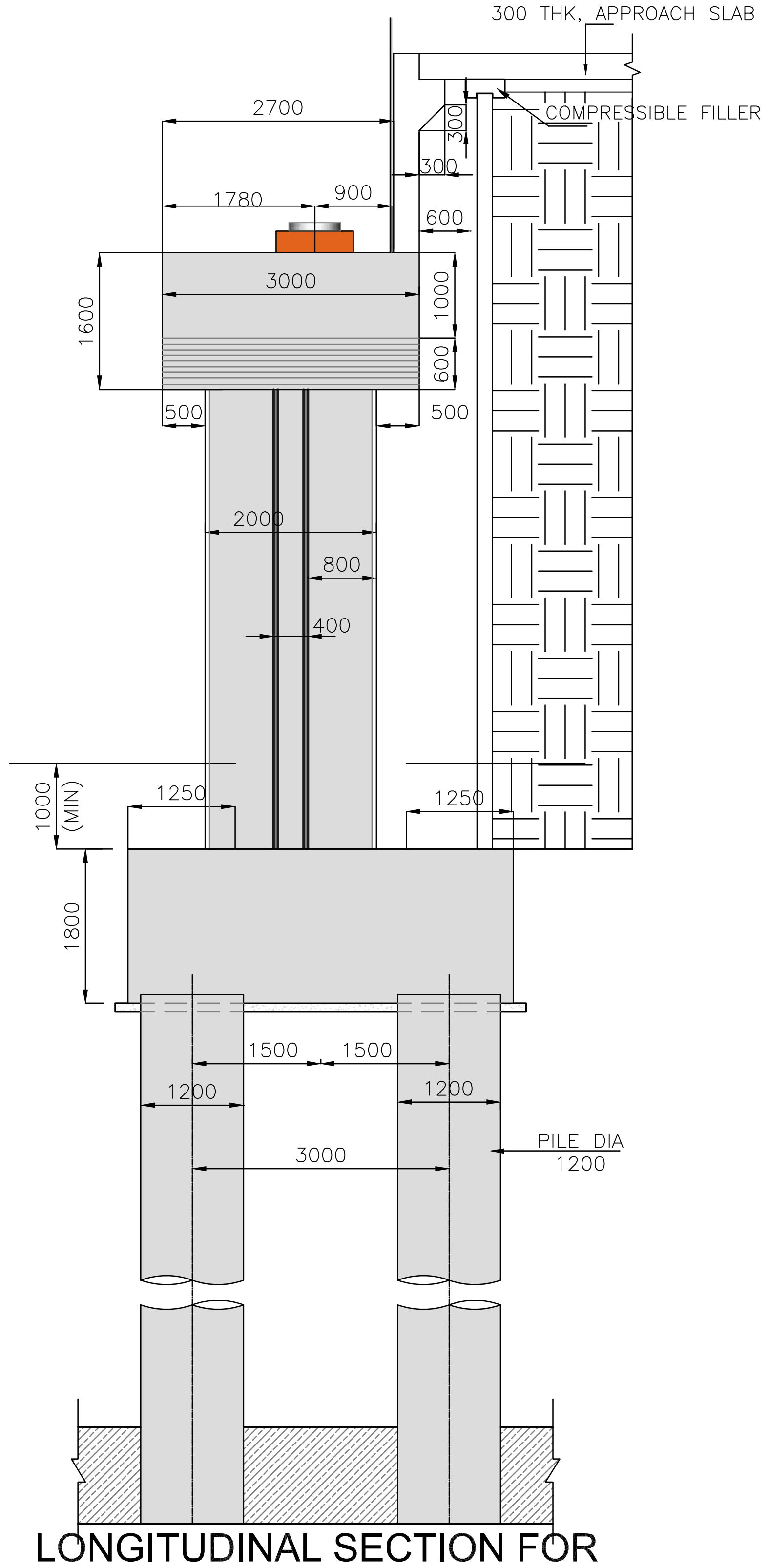

LONGITUDINAL SECTION FOR ABUTMENT SECTION (2-2)

(SCALE 1:80)

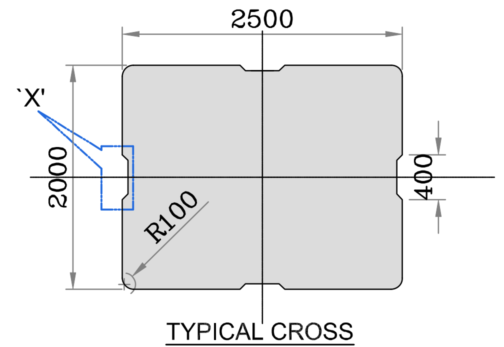

TYPICAL CROSS SECTION OF PIER

(SCALE 1:50)

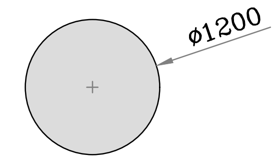

SECTION 3-3

(SCALE 1:50)

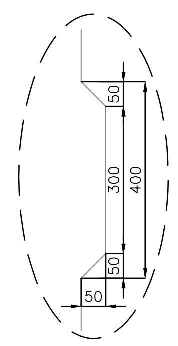

DETAIL `X'

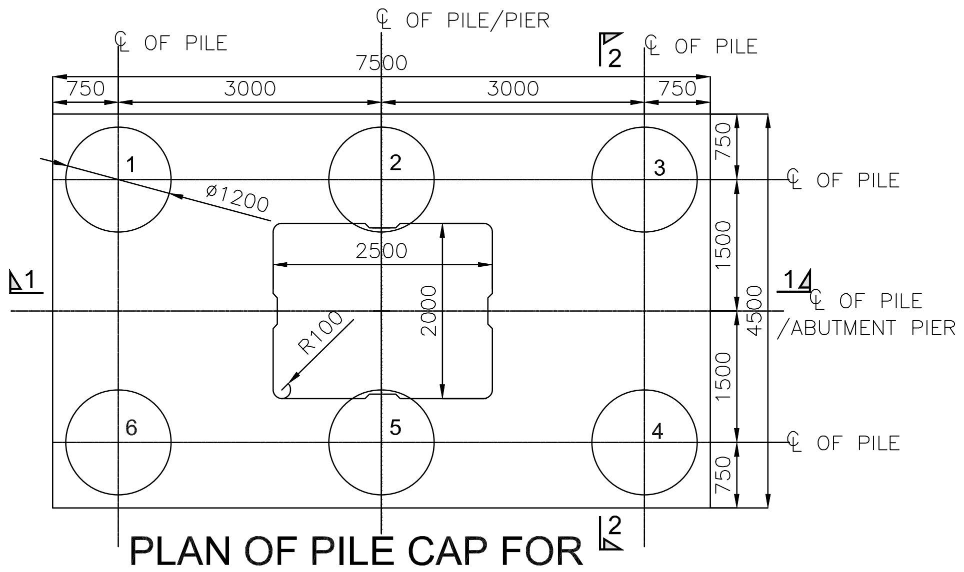

PLAN OF PILE CAP FOR ABUTMENT PIER

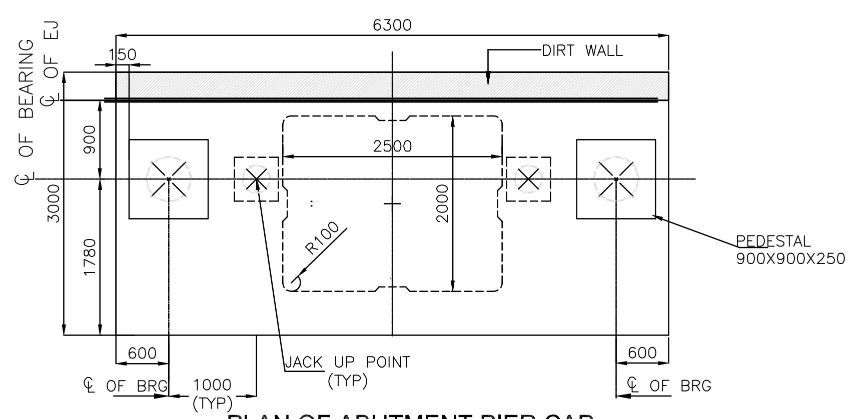

PLAN OF ABUTMENT PIER CAP

(SCALE 1:60)

NOTES

1. ALL DIMENSIONS ARE IN MILLIMETERS.
2. ALL DESIGN MIX CONCRETE SHALL BE CONFIRM TO SEC-6 CL:18.54 OF IRC -112 - 2020.
3. GRADE OF STEEL SHALL BE Fe 500 H.Y.S.D BARS AS PER TABLE 18.1 OF IRC - 112 -2020.
4. GRADE OF CONCRETE
   1. ABUTMENT : M35
   2. PILE CAP : M35
   3. PILE :M35
   4. PSC PIER CAP :M55
5. LEVELING COURSE BELOW FOUNDATION SHALL BE 100 THICK IN CEMENT CONCRETE M15
6. EXPOSURE - MODERATE
7. SEISMIC ZONE -II
8. PILE SHALL BE EXECUTED AS PER IS 2911 PART -1 SEC -2.
9. WORKING PILE LOAD
   - HORIZONTAL :- 30T
   - VERTICAL :- 350T
10. CLEAR COVER TO REINFORCEMENT FOR

FOUNDATION	:	75mm
PIER AND PIER CAP	:	50mm
PEDESTAL	:	40mm

SI NO.	DESCRIPTION	REVISION.	BY	DATE

RELEASED FOR
- [ ] Draft Detailed Project Report
- [x] Detailed Project Report
- [ ] TENDER

CLIENT :

Bengaluru Smart Infrastructure Limited
Office of the Project Engineer-1, B-Smile,
Room No.108, 1st Floor, Annexe-2 Building,
N.R.Square, BBMP Bengaluru-560002

CONSULTANT:

Infra Support
Your Complete Engineering Partner

INFRA SUPPORT ENGINEERING CONSULTANTS PVT. LTD
An ISO 9001-2015 Certified Company
Infra House, #456/11/1, Hennur Bande,
Hennur Bagalur Main Road, Kalyan Nagar,
Bangalore - 560 043.
Phone: +91 91 48192837
Email: info@infrasupport.in www.infrasupport.in

DRAWN	CDS	PROJECT:	Detailed Project Report (DPR) for Construction of Elevated Corridors of Package 1	
DESIGNED	RV	NAME OF WORK	Preparation of DPR for Construction of Elevated Corridor Mekhri Circle to Veterinary College Hebbal	JOB NO.
CHECKED	TRL			2501
DATE	Jan - 2026	TITLE :	CROSS SECTION OF ABUTMENT PIER (2.5X2) FOR 16.61M DECK WIDTH	REVISION
SHEET	01 of 01	SCALE:	As shown / DRG. NO. : IS \ 2501 \ STR \ GAD-01	R0

\\192.168.2.207\structures\2.0 STRUCTURAL DRAWINGS\DPR PROJECTS\2.BBMP ELEVATED CORRIDOR\Package-1\MEKRI CIRCLE TO HEBBAL\Title Sheet MH.dwg

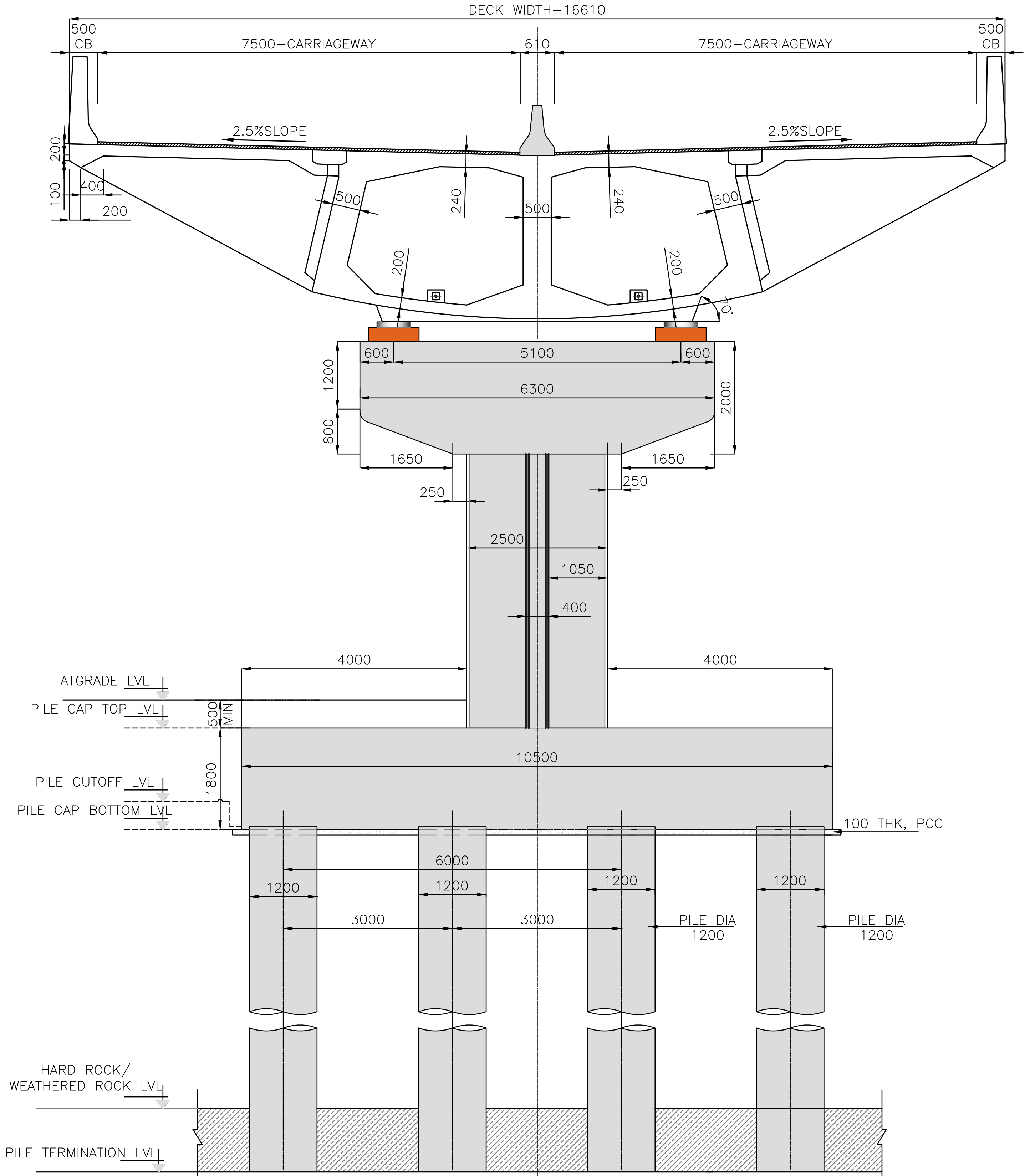

SECTION 3-3

(SCALE 1:80)

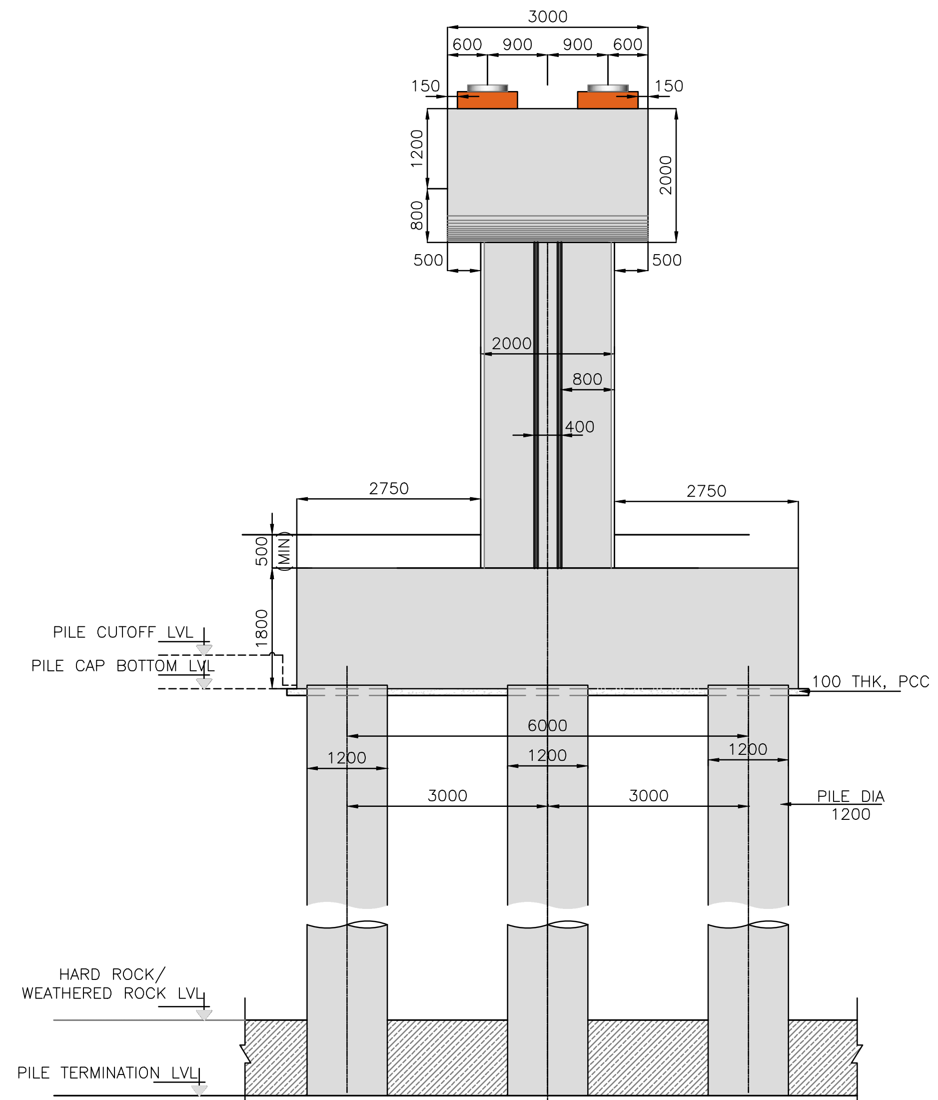

LONGITUDINAL SECTION FOR PIER SECTION(4-4)

(SCALE 1:80)

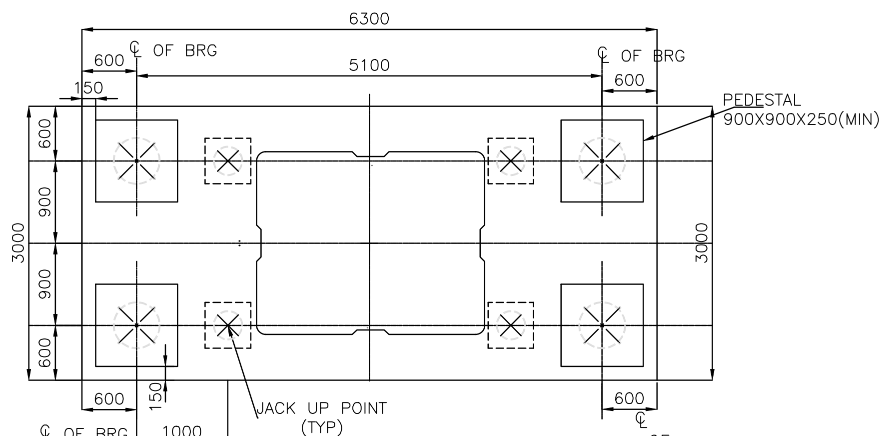

PLAN OF PIER CAP

(SCALE 1:60)

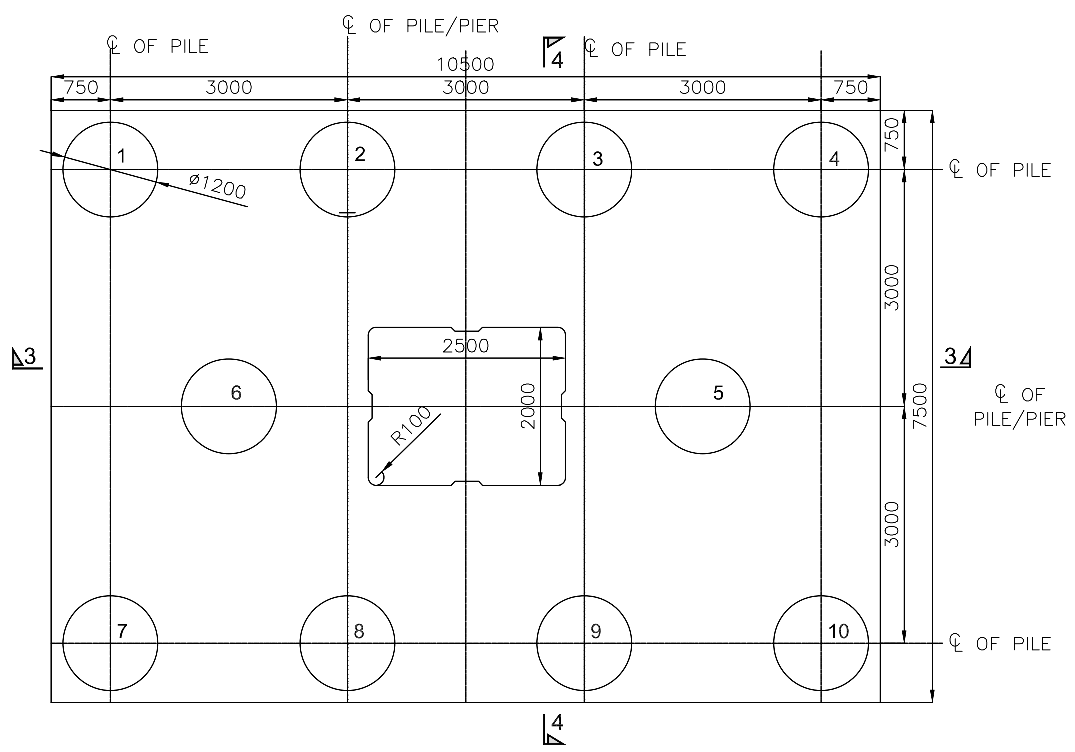

PLAN OF PILE CAP FOR PIER

PIER LENGTH ABOVE 15m

(SCALE 1:80)

NOTES

1. ALL DIMENSIONS ARE IN MILLIMETERS.
2. ALL DESIGN MIX CONCRETE SHALL BE CONFIRM TO SEC-6 CL:18.54 OF IRC -112 - 2020.
3. GRADE OF STEEL SHALL BE Fe 500 H.Y.S.D BARS AS PER TABLE 18.1 OF IRC - 112 -2020.
4. GRADE OF CONCRETE
   1. PIER : M35
   2. PILE CAP : M35
   3. PILE :M35
   4. PSC PIER CAP :M55
5. LEVELING COURSE BELOW FOUNDATION SHALL BE 100 THICK IN CEMENT CONCRETE M15
6. EXPOSURE - MODERATE
7. SEISMIC ZONE -II
8. PILE SHALL BE EXECUTED AS PER IS 2911 PART -1 SEC -2.
9. WORKING PILE LOAD
   HORIZONTAL :- 30T
   VERTICAL :- 350T
10. CLEAR COVER TO REINFORCEMENT FOR

FOUNDATION	:	75mm
PIER AND PIER CAP	:	50mm
PEDESTAL	:	40mm

SI NO.	DESCRIPTION	REVISION.	BY	DATE

RELEASED FOR
- [ ] Draft Detailed Project Report
- [x] Detailed Project Report
- [ ] TENDER

CLIENT :

Bengaluru Smart Infrastructure Limited
Office of the Project Engineer-1, B-Smile,
Room No.108, 1st Floor, Annexe-2 Building,
N.R.Square, BBMP Bengaluru-560002

CONSULTANT:

Infra Support
Your Complete Engineering Partner

INFRA SUPPORT ENGINEERING CONSULTANTS PVT. LTD
An ISO 9001-2015 Certified Company
Infra House, #456/11/1, Hennur Bande,
Hennur Bagalur Main Road, Kalyan Nagar,
Bangalore - 560 043.
Phone: +91 91 48192837
Email: info@infrasupport.in www.infrasupport.in

DRAWN	CDS	PROJECT:	Detailed Project Report (DPR) for Construction of Elevated Corridors of Package 1	
DESIGNED	RV	NAME OF WORK	Preparation of DPR for Construction of Elevated Corridor Mekhri Circle to Veterinary College Hebbal	JOB NO.
CHECKED	TRL			2501
DATE	Jan - 2026	TITLE :	CROSS SECTION OF STANDARD PIER (2.5X2) FOR 16.61M DECK WIDTH	REVISION
SHEET	01 of 01	SCALE:	As shown — DRG. NO. : IS \ 2501 \ STR \GAD-01	R0

\\192.168.2.207\structures\2.0 STRUCTURAL DRAWINGS\DPR PROJECTS\2.BBMP ELEVATED CORRIDOR\Package-1\MEKRI CIRCLE TO HEBBAL\Title Sheet MH.dwg

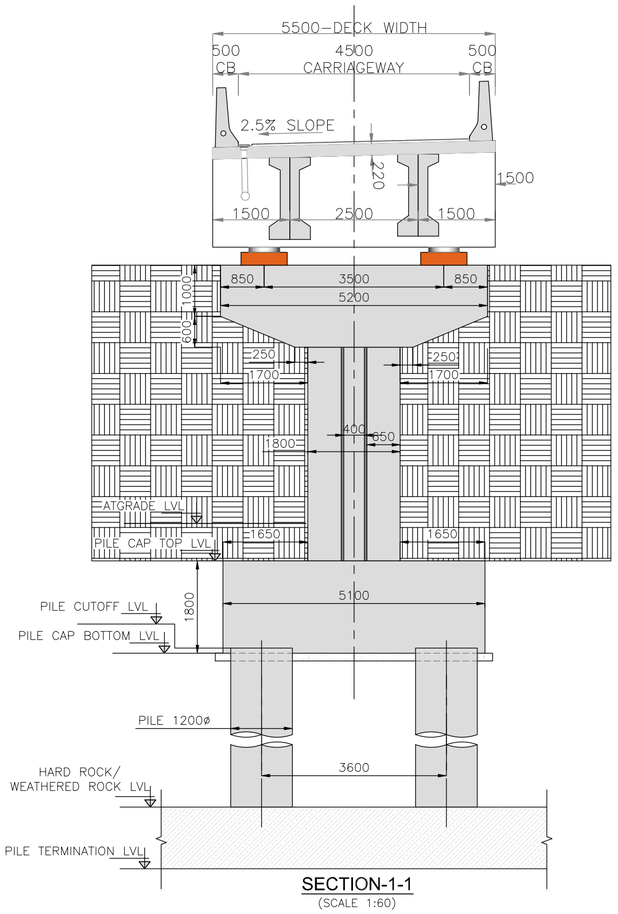

SECTION-1-1
(SCALE 1:60)

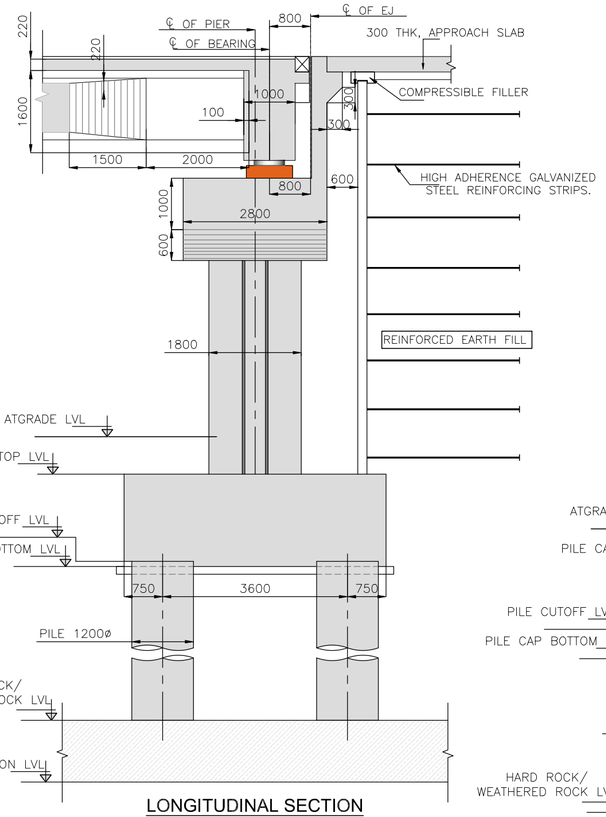

LONGITUDINAL SECTION
OF ABUTMENT PIER
(SCALE 1:60)

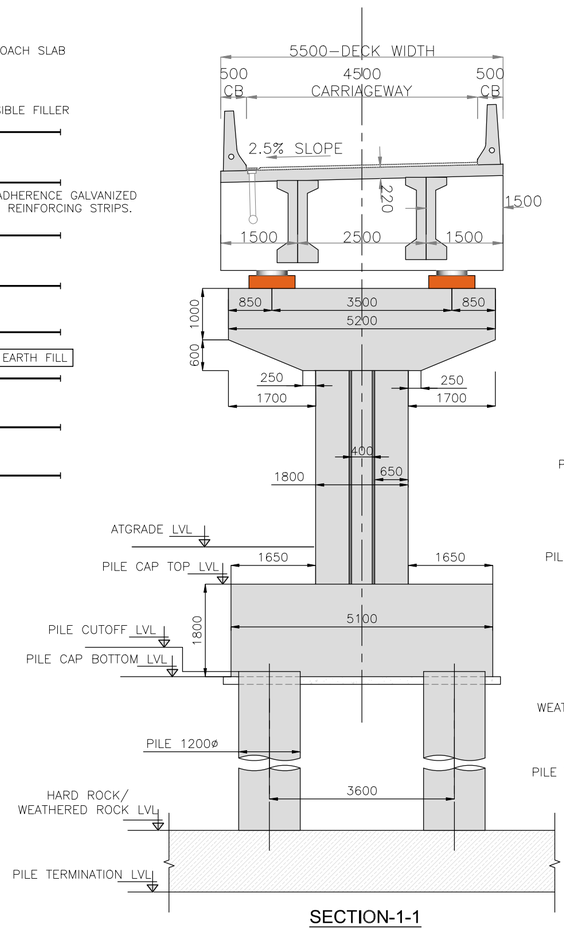

SECTION-1-1
(SCALE 1:60)

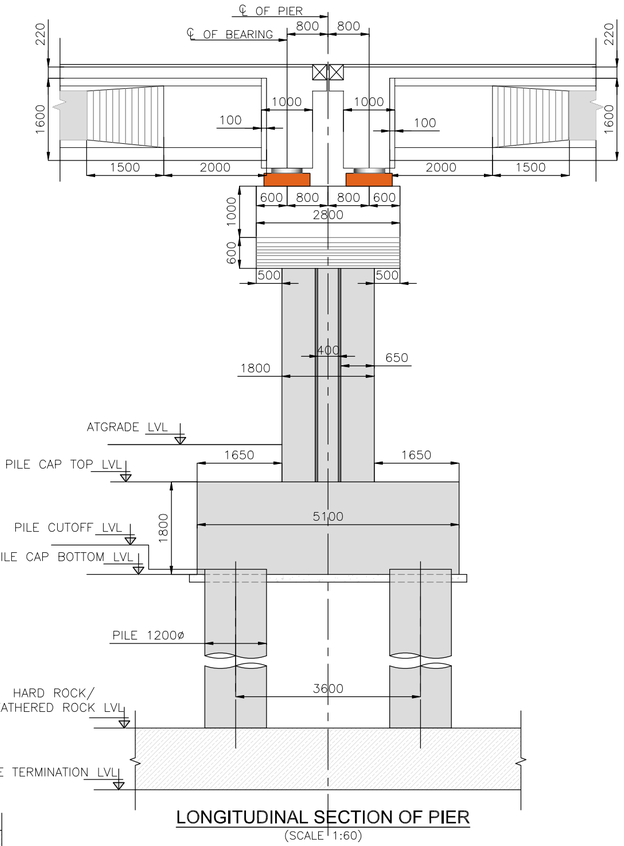

LONGITUDINAL SECTION OF PIER
(SCALE 1:60)

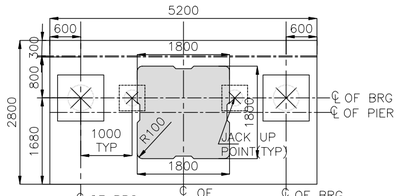

PLAN OF ABUTMENT PIER CAP
(SCALE 1:60)

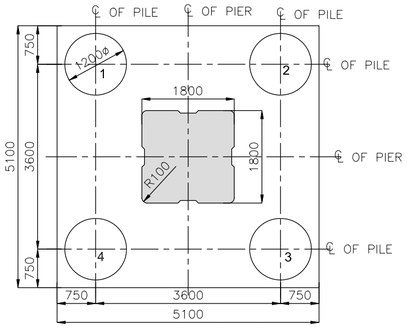

PLAN OF PILE CAP
(SCALE 1:60)

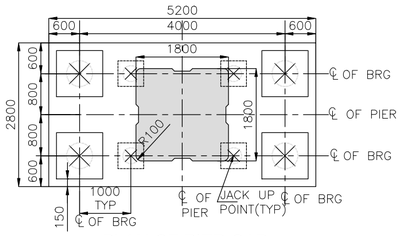

PLAN OF PIER CAP
(SCALE 1:60)

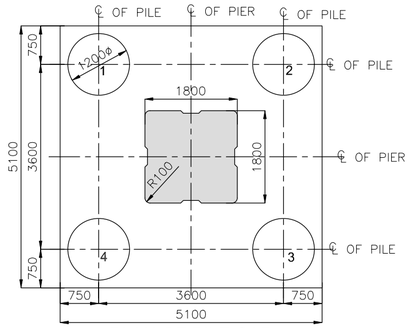

PLAN OF PILE CAP
(SCALE 1:60)

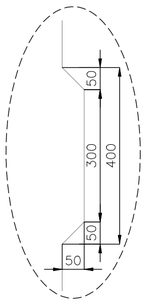

DETAIL `X'

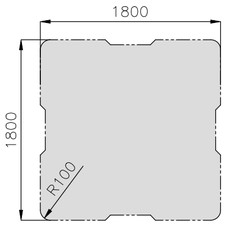

TYPICAL CROSS
SECTION OF PIER
(SCALE 1:50)

SI NO.	DESCRIPTION	REVISION.	BY	DATE

RELEASED FOR
- ☐ Draft Detailed Project Report
- ▨ Detailed Project Report
- ☐ TENDER

CLIENT :

Bengaluru Smart Infrastructure Limited
Office of the Project Engineer-1, B-Smile,
Room No.108, 1st Floor, Annexe-2 Building,
N.R.Square, BBMP Bengaluru-560002

CONSULTANT:

Infra Support
Your Complete Engineering Partner

INFRA SUPPORT ENGINEERING CONSULTANTS PVT. LTD
An ISO 9001-2015 Certified Company
Infra House, #456/11/1, Hennur Bande,
Hennur Bagalur Main Road, Kalyan Nagar,
Bangalore - 560 043.
Phone: +91 91 48192837
Email: info@infrasupport.in www.infrasupport.in

DRAWN	CDS	PROJECT:	Detailed Project Report (DPR) for Construction of Elevated Corridors of Package 1
DESIGNED	RV	NAME OF WORK	Preparation of DPR for Construction of Elevated Corridor Mekhri Circle to Veterinary College Hebbal
CHECKED	TRL		
DATE	Jan - 2026	TITLE :	CROSS SECTION OF ABUTMENT PIER AND PIER (5.5m DECK WIDTH) FOR UP RAMP AND DOWN RAMP
SHEET	01 of 01	SCALE:	As shown

JOB NO. 2501
REVISION R0
DRG. NO. : IS \ 2501 \ STR \GAD-01

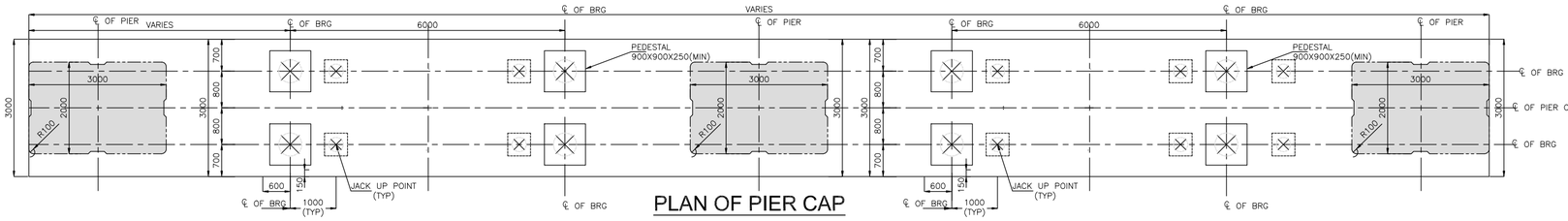

PLAN OF PIER CAP

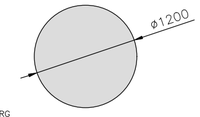

SECTION 3-3

(SCALE 1:50)

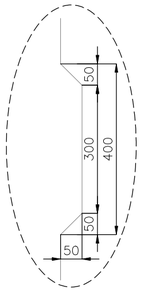

DETAIL `X'

NOTES

1. ALL DIMENSIONS ARE IN MILLIMETERS.
2. ALL DESIGN MIX CONCRETE SHALL BE CONFIRM TO SEC-6 CL:18.54 OF IRC -112 - 2020.
3. GRADE OF STEEL SHALL BE Fe 500 H.Y.S.D BARS AS PER TABLE 18.1 OF IRC - 112 -2020.
4. GRADE OF CONCRETE
   1. PIER : M35
   2. PILE CAP : M35
   3. PILE :M35
   4. PSC PIER CAP :M55
5. LEVELING COURSE BELOW FOUNDATION SHALL BE 100 THICK IN CEMENT CONCRETE M15
6. EXPOSURE - MODERATE
7. SEISMIC ZONE -II
8. PILE SHALL BE EXECUTED AS PER IS 2911 PART -1 SEC -2.
9. WORKING PILE LOAD
   HORIZONTAL :- 30T
   VERTICAL :- 350T
10. CLEAR COVER TO REINFORCEMENT FOR

FOUNDATION	:	75mm
PIER AND PIER CAP	:	50mm
PEDESTAL	:	40mm

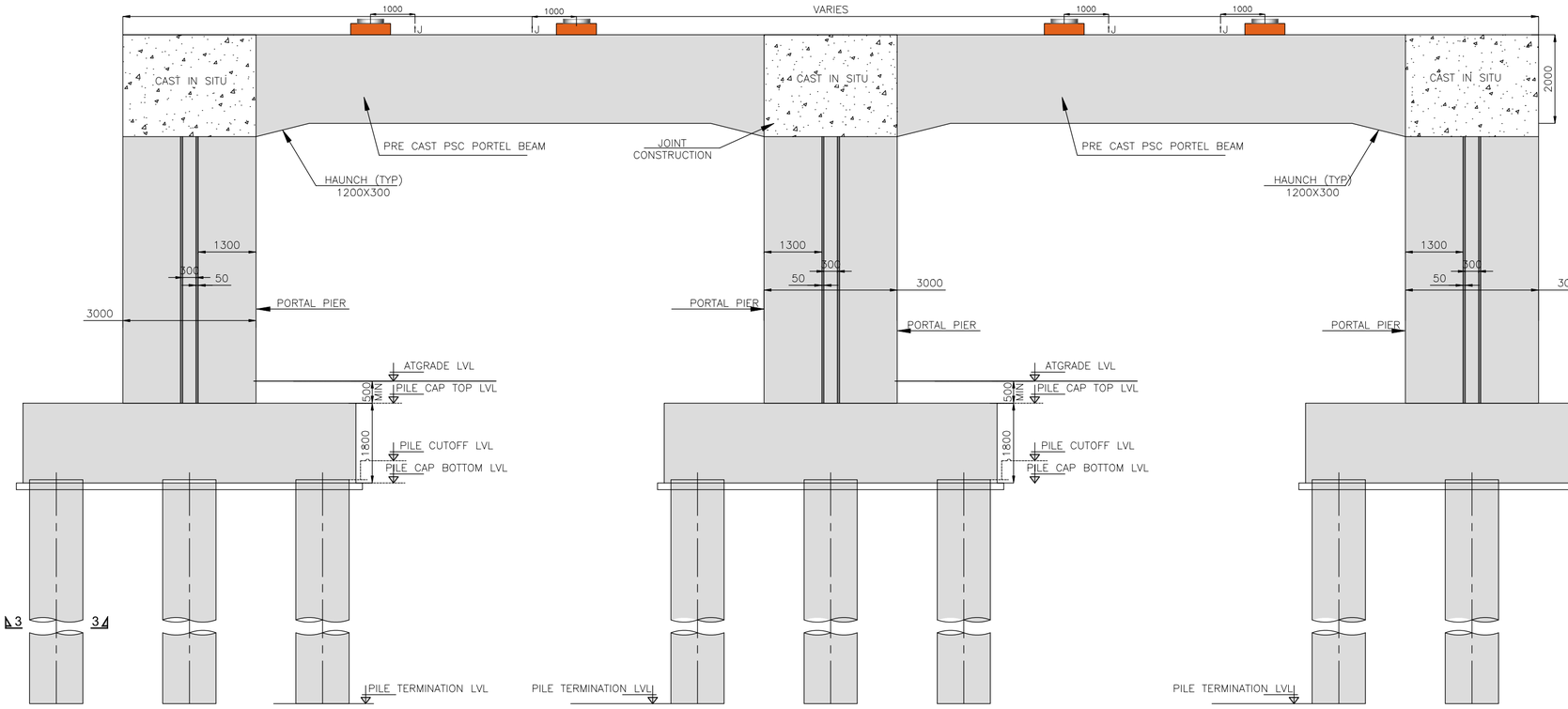

TRNSVERSE SECTION OF PIER

(SCALE 1:80)

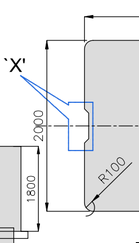

TYPICAL CROSS SECTION OF PIER

(SCALE 1:50)

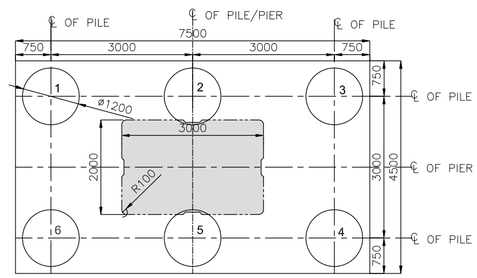

PLAN OF PILE CAP

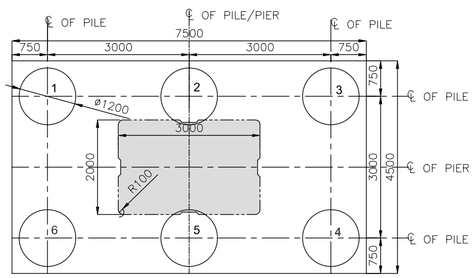

PLAN OF PILE CAP

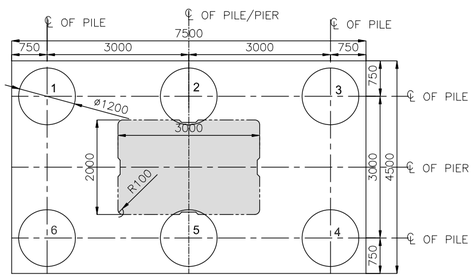

PLAN OF PILE CAP

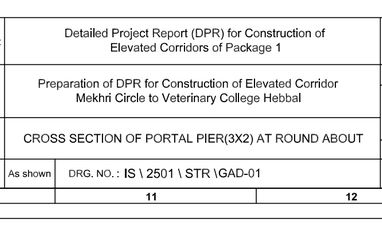

LONGITUDINAL SECTION OF PIER

(SCALE 1:80)

SI NO.	DESCRIPTION	REVISION.	BY	DATE

RELEASED FOR

- ☐ Draft Detailed Project Report
- ▨ Detailed Project Report
- ☐ TENDER

CLIENT :

Bengaluru Smart Infrastructure Limited
Office of the Project Engineer-1, B-Smile,
Room No.108, 1st Floor, Annexe-2 Building,
N.R.Square, BBMP Bengaluru-560002

CONSULTANT:

Infra Support
Your Complete Engineering Partner

INFRA SUPPORT ENGINEERING CONSULTANTS PVT. LTD
An ISO 9001-2015 Certified Company
Infra House, #456/11/1, Hennur Bande,
Hennur Bagalur Main Road, Kalyan Nagar,
Bangalore - 560 043.
Phone: +91 91 48192837
Email: info@infrasupport.in www.infrasupport.in

DRAWN	CDS	PROJECT:	Detailed Project Report (DPR) for Construction of Elevated Corridors of Package 1
DESIGNED	RV	NAME OF WORK	Preparation of DPR for Construction of Elevated Corridor Mekhri Circle to Veterinary College Hebbal
CHECKED	TRL		
DATE	Jan - 2026	TITLE :	CROSS SECTION OF PORTAL PIER(3X2) AT ROUND ABOUT
SHEET	01 of 01	SCALE:	As shown

JOB NO. 2501

DRG. NO. : IS \ 2501 \ STR \GAD-01

REVISION R0

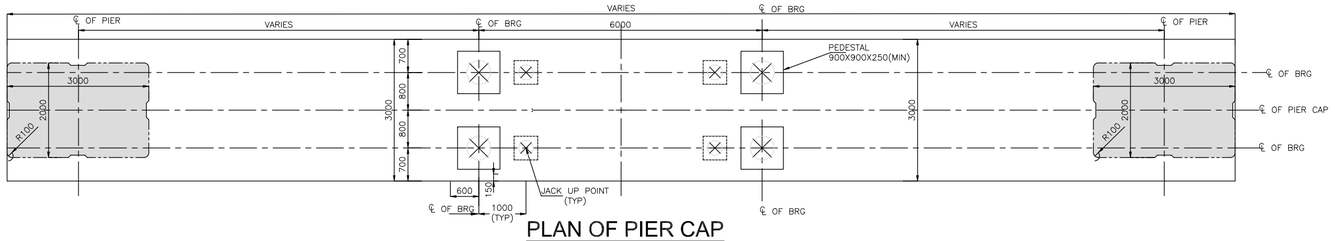

PLAN OF PIER CAP

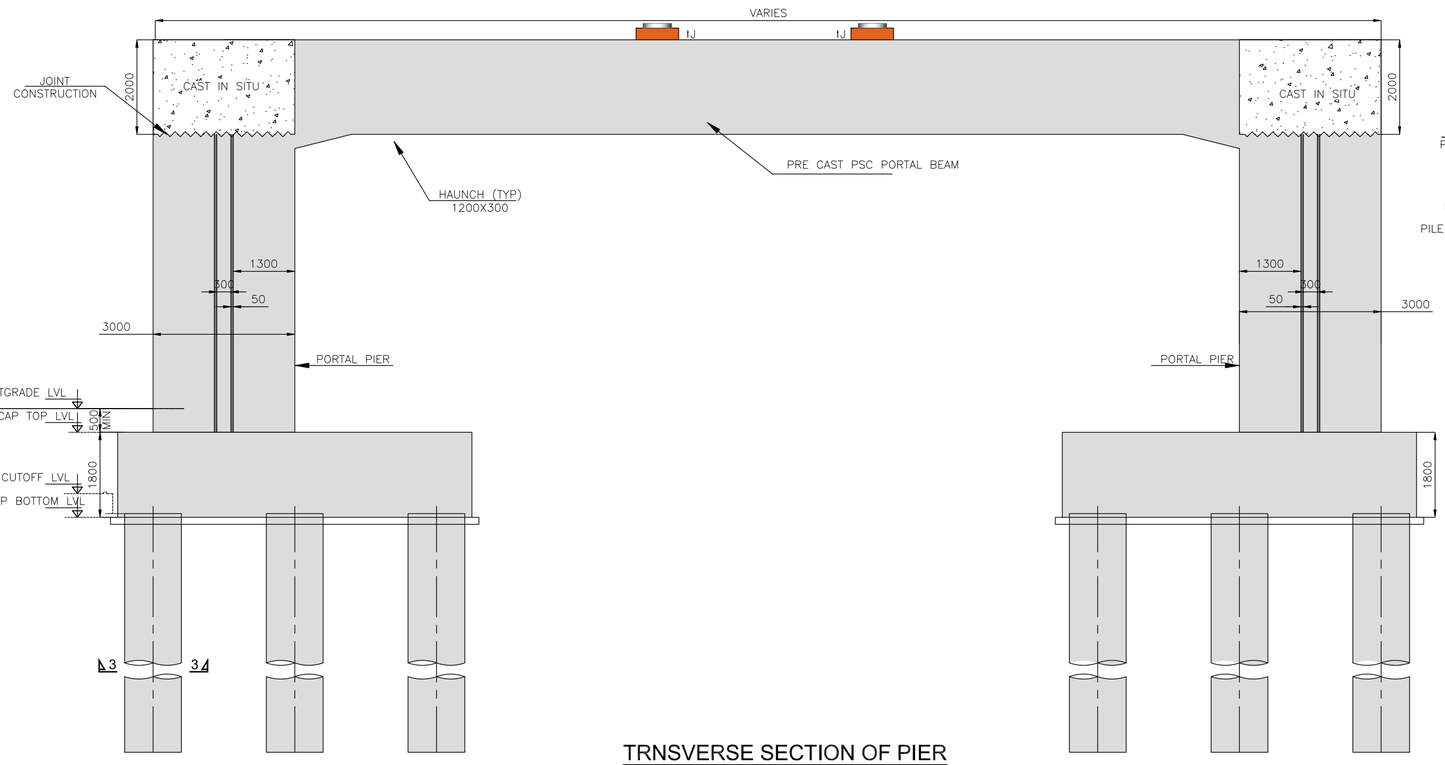

TRNSVERSE SECTION OF PIER

(SCALE 1:80)

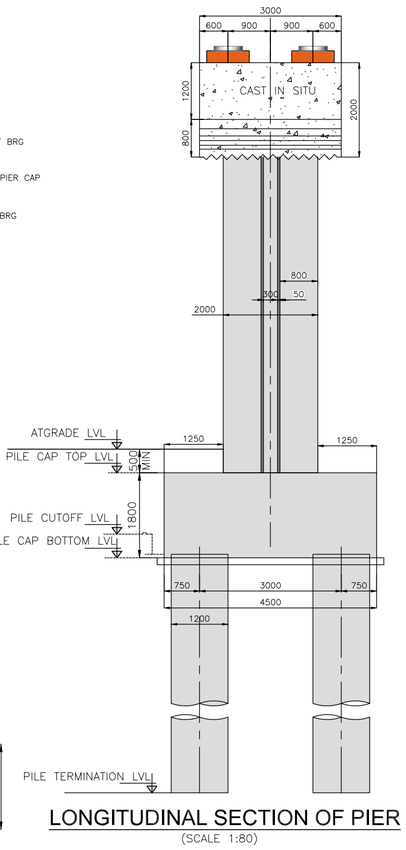

LONGITUDINAL SECTION OF PIER

(SCALE 1:80)

NOTES

1. ALL DIMENSIONS ARE IN MILLIMETERS.
2. ALL DESIGN MIX CONCRETE SHALL BE CONFIRM TO SEC-6 CL:18.54 OF IRC -112 - 2020.
3. GRADE OF STEEL SHALL BE Fe 500 H.Y.S.D BARS AS PER TABLE 18.1 OF IRC - 112 -2020.
4. GRADE OF CONCRETE
   1. PIER : M35
   2. PILE CAP : M35
   3. PILE :M35
   4. PSC PIER CAP :M55
5. LEVELING COURSE BELOW FOUNDATION SHALL BE 100 THICK IN CEMENT CONCRETE M15
6. EXPOSURE - MODERATE
7. SEISMIC ZONE -II
8. PILE SHALL BE EXECUTED AS PER IS 2911 PART -1 SEC -2.
9. WORKING PILE LOAD
   HORIZONTAL :- 30T
   VERTICAL :- 350T
10. CLEAR COVER TO REINFORCEMENT FOR

FOUNDATION	:	75mm
PIER AND PIER CAP	:	50mm
PEDESTAL	:	40mm

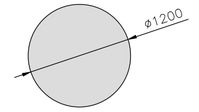

SECTION 3-3

(SCALE 1:50)

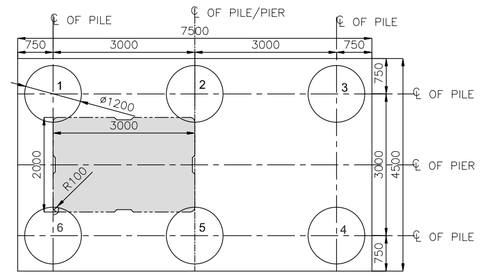

PLAN OF PILE CAP

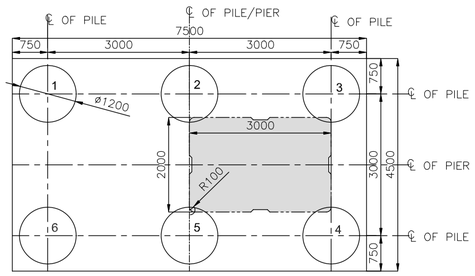

PLAN OF PILE CAP

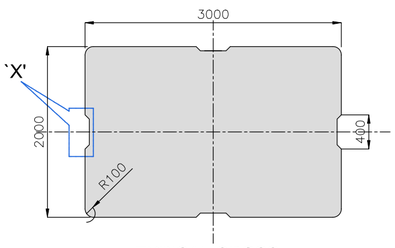

TYPICAL CROSS SECTION OF PIER

(SCALE 1:50)

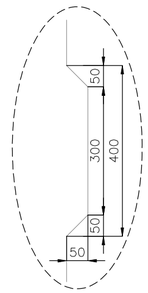

DETAIL `X'

SI NO.	DESCRIPTION	REVISION.	BY	DATE

RELEASED FOR

- ☐ Draft Detailed Project Report
- ▨ Detailed Project Report
- ☐ TENDER

CLIENT :

Bengaluru Smart Infrastructure Limited
Office of the Project Engineer-1, B-Smile,
Room No.108, 1st Floor, Annexe-2 Building,
N.R.Square, BBMP Bengaluru-560002

CONSULTANT:

Infra Support
Your Complete Engineering Partner

INFRA SUPPORT ENGINEERING CONSULTANTS PVT. LTD
An ISO 9001-2015 Certified Company
Infra House, #456/11/1, Hennur Bande,
Hennur Bagalur Main Road, Kalyan Nagar,
Bangalore - 560 043.
Phone: +91 91 48192837
Email: info@infrasupport.in www.infrasupport.in

DRAWN	CDS	PROJECT:	Detailed Project Report (DPR) for Construction of Elevated Corridors of Package 1		
DESIGNED	RV	NAME OF WORK	Preparation of DPR for Construction of Elevated Corridor Mekhri Circle to Veterinary College Hebbal	JOB NO.	2501
CHECKED	TRL				
DATE	Jan - 2026	TITLE :	CROSS SECTION OF STANDARD PORTAL PIER(3X2m)	REVISION	R0
SHEET	01 of 01	SCALE:	As shown	DRG. NO. : IS \ 2501 \ STR \GAD-01	

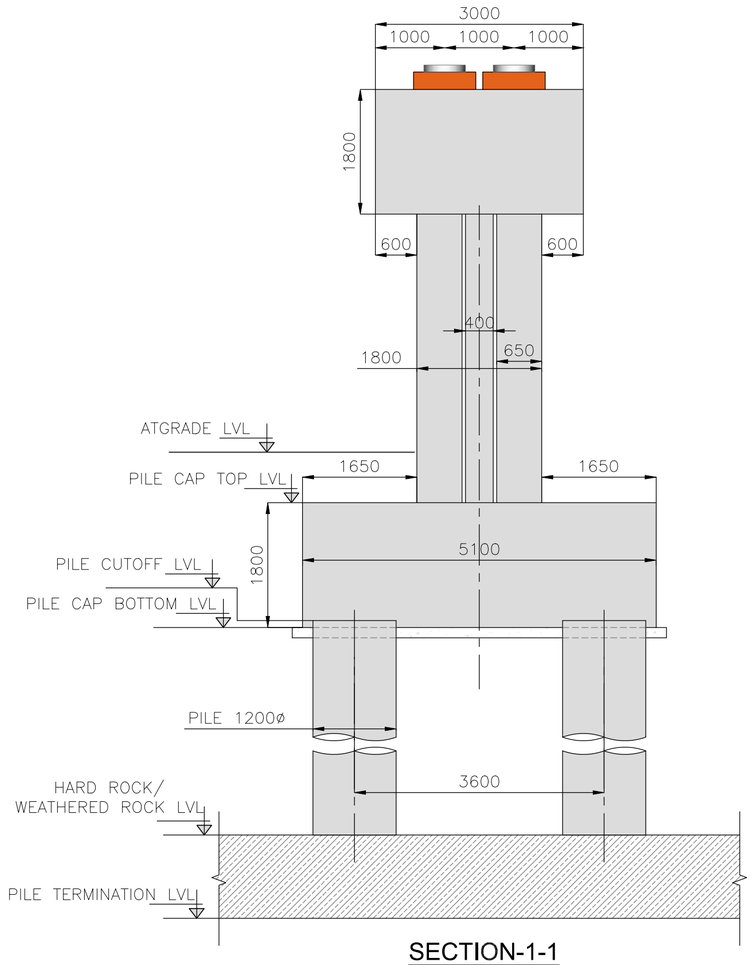

SECTION-1-1
(SCALE 1:60)

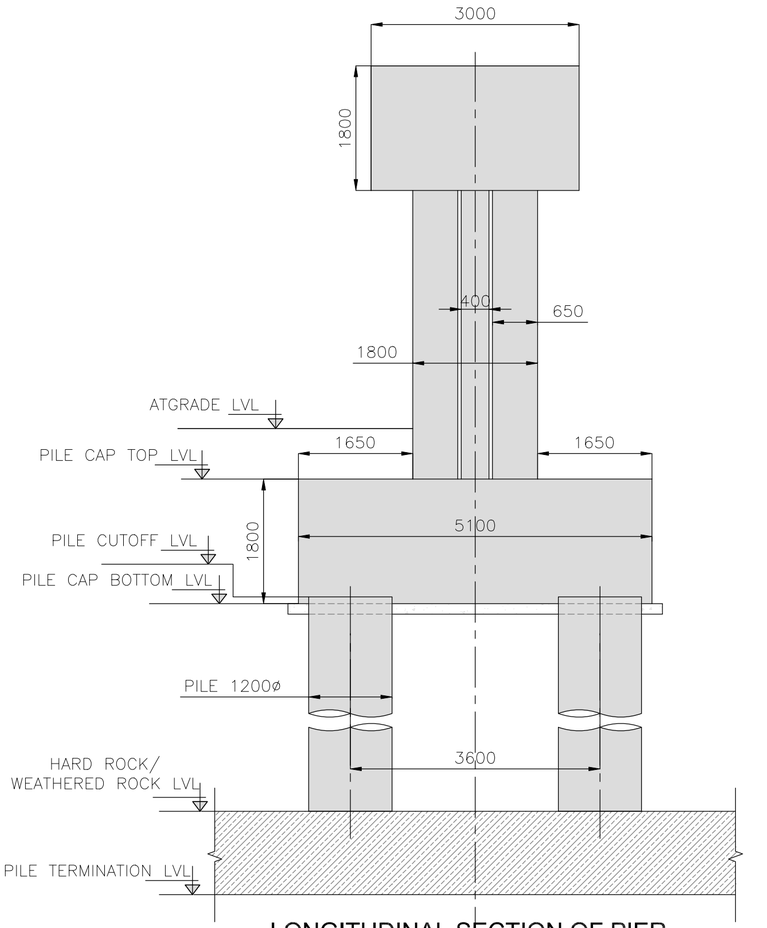

LONGITUDINAL SECTION OF PIER
(SCALE 1:60)

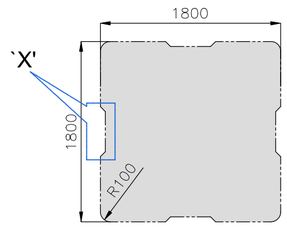

TYPICAL CROSS SECTION OF PIER
(SCALE 1:50)

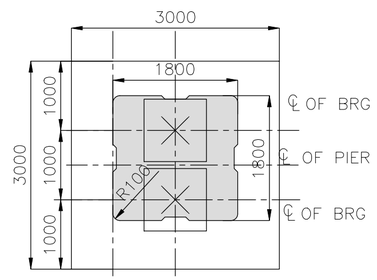

PLAN OF PIER CAP
(SCALE 1:60)

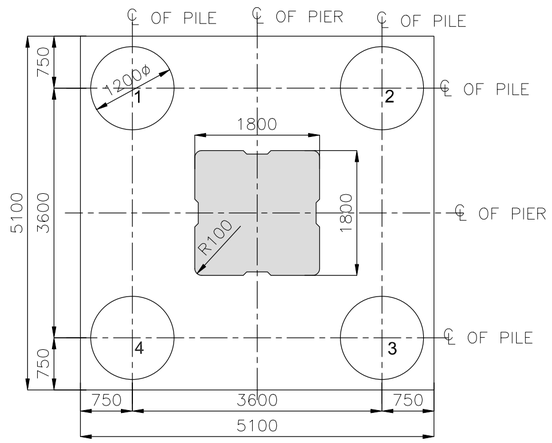

PLAN OF PILE CAP
(SCALE 1:60)

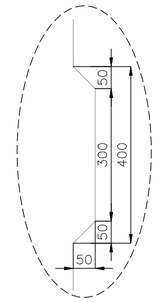

DETAIL `X'

SI NO.	DESCRIPTION	REVISION.	BY	DATE

RELEASED FOR
- ☐ Draft Detailed Project Report
- ▨ Detailed Project Report
- ☐ TENDER

CLIENT :

Bengaluru Smart Infrastructure Limited
Office of the Project Engineer-1, B-Smile,
Room No.108, 1st Floor, Annexe-2 Building,
N.R.Square, BBMP Bengaluru-560002

CONSULTANT:

Infra Support
Your Complete Engineering Partner

INFRA SUPPORT ENGINEERING CONSULTANTS PVT. LTD
An ISO 9001-2015 Certified Company
Infra House, #456/11/1, Hennur Bande,
Hennur Bagalur Main Road, Kalyan Nagar,
Bangalore - 560 043.
Phone: +91 91 48192837
Email: info@infrasupport.in www.infrasupport.in

DRAWN	CDS	PROJECT:	Detailed Project Report (DPR) for Construction of Elevated Corridors of Package 1
DESIGNED	RV	NAME OF WORK	Preparation of DPR for Construction of Elevated Corridor Mekhri Circle to Veterinary College Hebbal
CHECKED	TRL	TITLE :	CROSS SECTION OF STANDARD PIER(1.8X1.8) FOR ROUNDABOUT
DATE	Jan - 2026	SCALE:	As shown
SHEET	01 of 01	DRG. NO. :	IS \ 2501 \ STR \GAD-01

JOB NO. 2501
REVISION R0

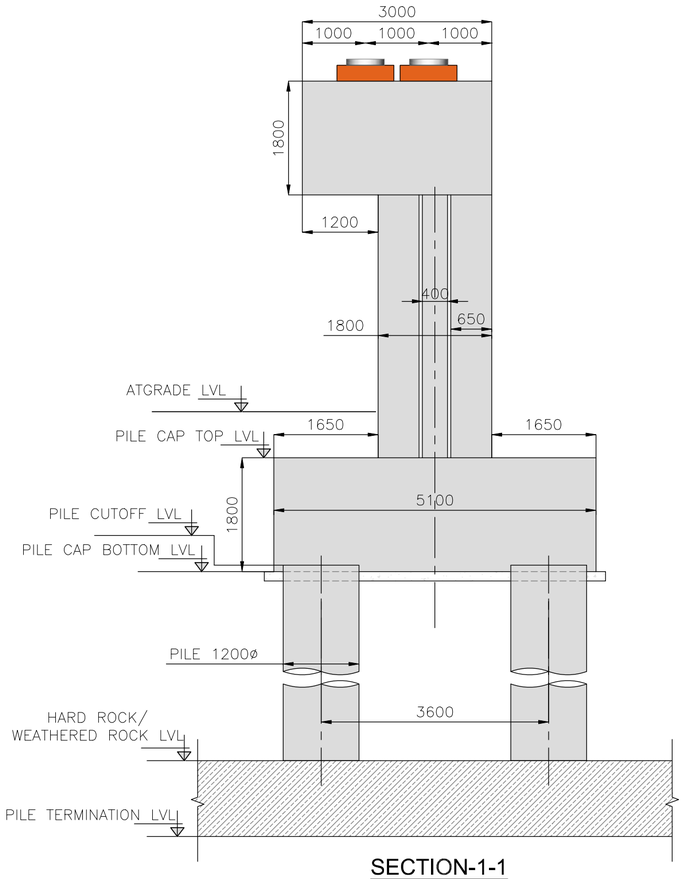

SECTION-1-1

(SCALE 1:60)

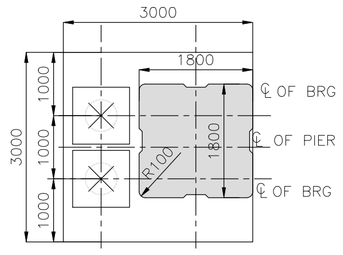

PLAN OF PIER CAP

(SCALE 1:60)

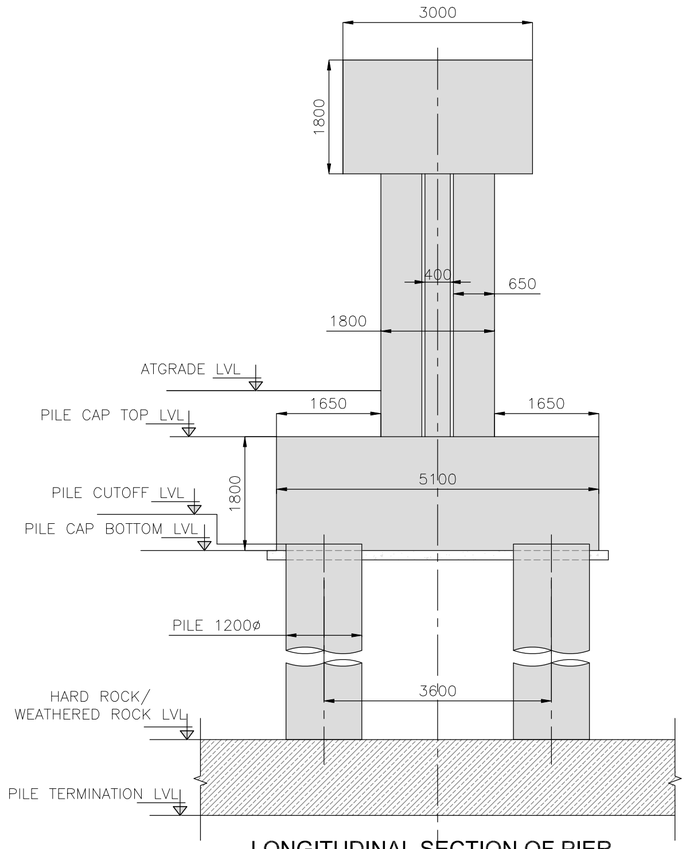

LONGITUDINAL SECTION OF PIER

(SCALE 1:60)

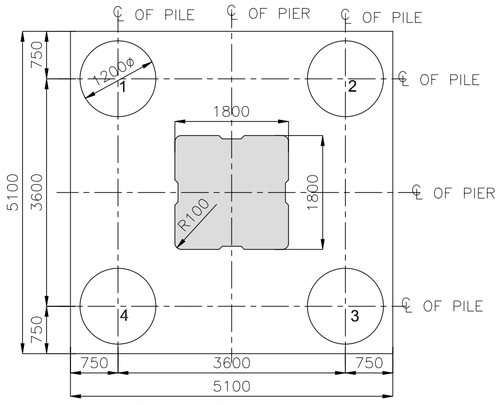

PLAN OF PILE CAP

(SCALE 1:60)

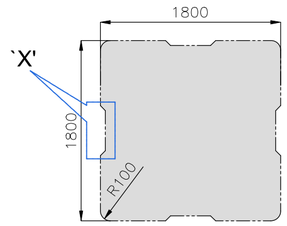

TYPICAL CROSS SECTION OF PIER

(SCALE 1:50)

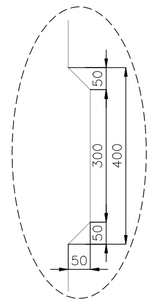

DETAIL `X'

SI NO.	DESCRIPTION	REVISION.	BY	DATE

RELEASED FOR

- ☐ Draft Detailed Project Report
- ▨ Detailed Project Report
- ☐ TENDER

CLIENT :

Bengaluru Smart Infrastructure Limited
Office of the Project Engineer-1, B-Smile,
Room No.108, 1st Floor, Annexe-2 Building,
N.R.Square, BBMP Bengaluru-560002

CONSULTANT:

Infra Support
Your Complete Engineering Partner

INFRA SUPPORT ENGINEERING CONSULTANTS PVT. LTD
An ISO 9001-2015 Certified Company
Infra House, #456/11/1, Hennur Bande,
Hennur Bagalur Main Road, Kalyan Nagar,
Bangalore - 560 043.
Phone: +91 91 48192837
Email: info@infrasupport.in www.infrasupport.in

DRAWN	CDS	PROJECT:	Detailed Project Report (DPR) for Construction of Elevated Corridors of Package 1
DESIGNED	RV	NAME OF WORK	Preparation of DPR for Construction of Elevated Corridor Mekhri Circle to Veterinary College Hebbal
CHECKED	TRL		
DATE	Jan - 2026	TITLE :	CROSS SECTION OF CANTILEVER PIER(1.8X1.8) FOR ROUNDABOUT
SHEET	01 of 01	SCALE:	As shown

JOB NO. 2501

REVISION R0

DRG. NO. : IS \ 2501 \ STR \GAD-01